CARBON STEEL GAS Y FILTER WITH FLANGES PN16 TYPE 821

FEATURES

The Y 821 carbon steel filter is designed to protect sensitive valves on gas lines such as automatic taps, pressure reducers, control valves, etc. The filtration threshold is 150 µm. The cap allows the connection of a purge valve. This filter can be used on natural gas up to a pressure of 16 bar. The construction and face-to-face dimensions of the 821 filter are standardized according to European standards.

AVAILABLE MODELS

DN50 to DN200, PN16 flange connection.

LIMITS OF USE

Fluid pressure: PS	16 bar
Fluid temperature: TS	-20°C / +400°C

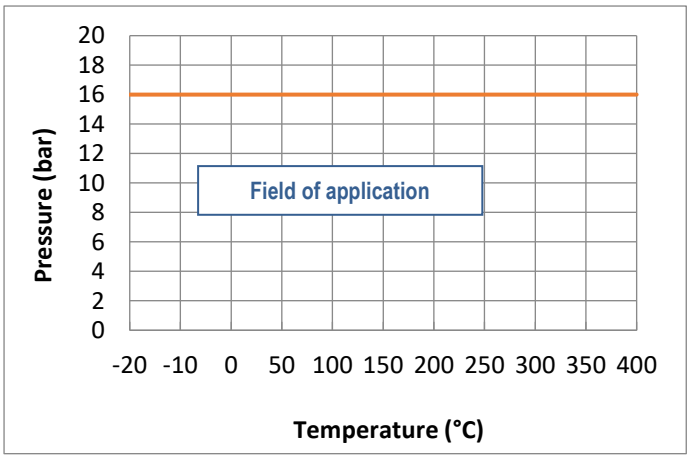

CONSTRUCTION GUIDELINES AND STANDARDS

OBJECT	Standard	NB	OBJECT	Standard
EC Pressure Directive 2014/68	category III	BV 0062	Final test	EN 12266-1
			Material certificate	EN 10204
Flange dimensions	EN 1092-1		FTF Dimension	EN 558-1 series 1

FILTRATION THRESHOLDS

Standard	Options
150 µm	200 µm, 500 µm and 1000 µm

CONSTRUCTION

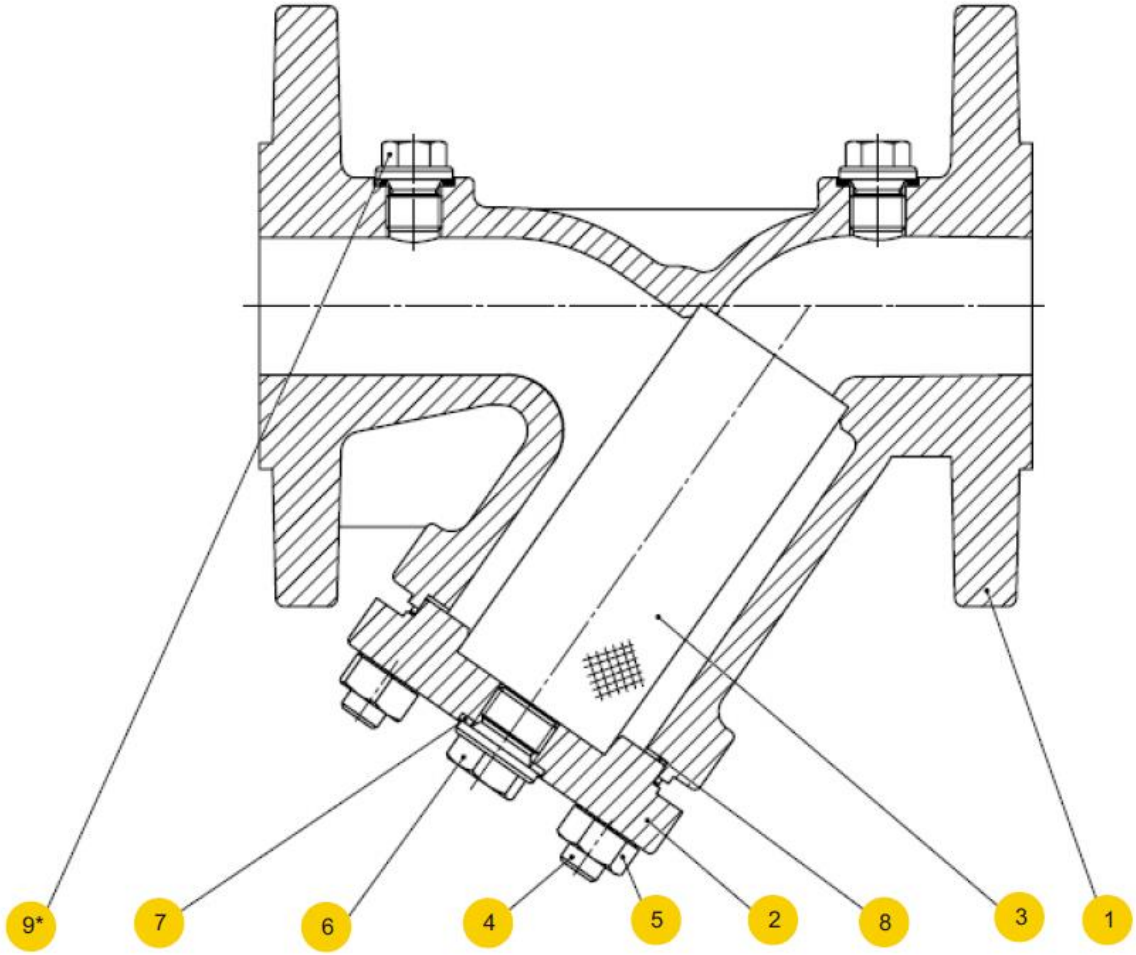

No.	Designation	Material
1	Body	P265 GH carbon steel
2	Bonnet	P265 GH carbon steel
3	Screen	Stainless steel 1.4301
4	Screw	25 Cr Mo 4 steel
5	Nut	C35E steel
6	Drain cap	C35E steel
7	Drain gasket	Steel 1.4571
8	Bonnet gasket	Graphite-stainless steel
9	Pressure hole plug (optional)	C35E steel

Gegevens ter indicatie, wijzigingen voorbehouden.

CARBON STEEL GAS Y FILTER WITH FLANGES PN16 TYPE 821

DIMENSIONS (mm)

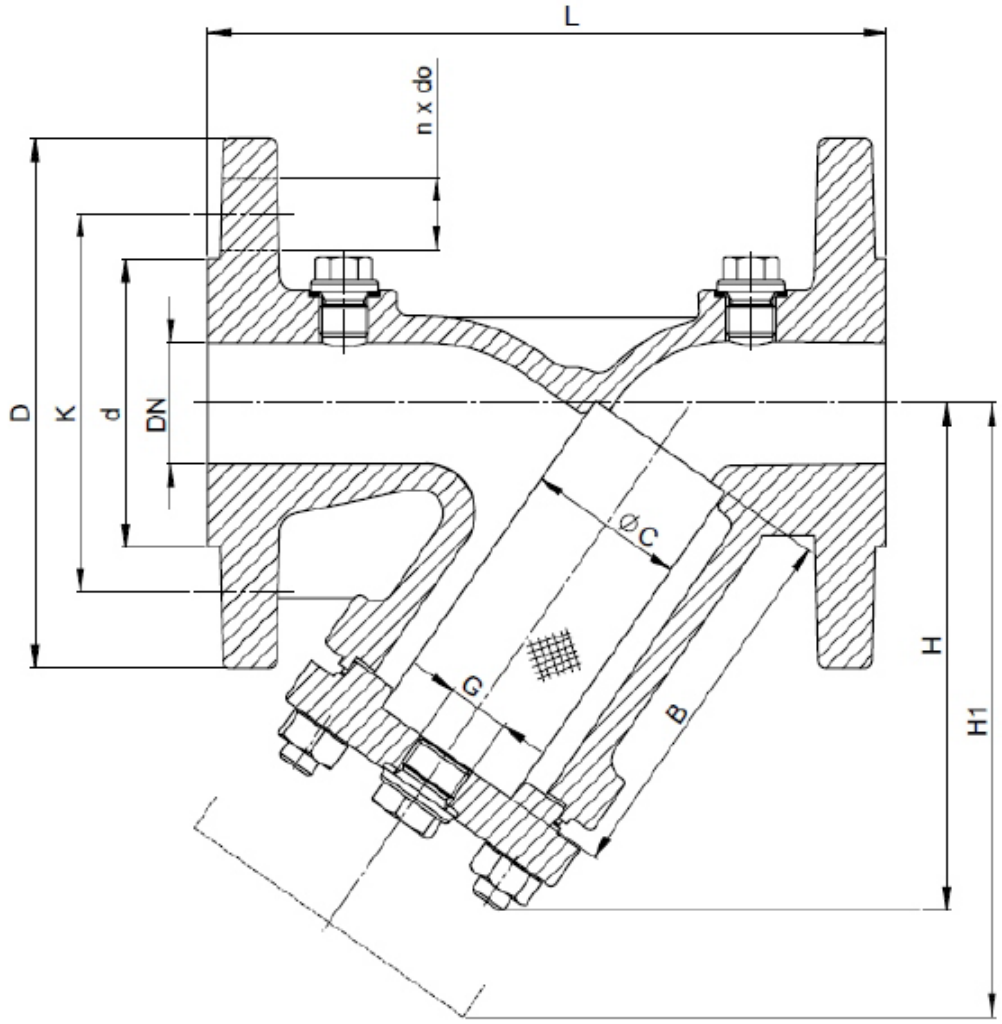

DN	50	65	80	100	125	150	200
L	230	290	310	350	400	480	600
D	165	185	200	220	250	285	340
d	99	118	132	156	184	211	266
K	125	145	160	180	210	240	295
N x do	4x19	4x19	8x19	8x19	8x19	8x23	12x23
H	175	175	205	275	325	397	535
H1	250	285	330	365	425	480	610
G	1”	1”	1”	1 ½''	1 ½''	1 ½''	1 ½''
C	61.5	78.5	89.5	109.5	137.5	160	210
B	119	134	149	169	199	224	284
Weight (kg)	11.0	14.6	18.6	27.0	38.5	54.5	110.0

Gegevens ter indicatie, wijzigingen voorbehouden.

FLOW COEFFICIENT Kvs (M3/h):

These values are for a filter with a new unclogged screen.

DN	50	65	80	100	125	150	200
Kv (m3/h)	64.7	98.0	149	234	376	454	853

Calculation formula for a gas :

If $P2 > P1/2$

$$Kv = \frac{Q}{445} x \sqrt{\frac{d\ x\ T}{\Delta P\ x\ P2}}$$

If $P2 < P1/2$

$$Kv = \frac{Q}{240\ x\ P1}\ x \sqrt{d\ x\ T}$$

Kv	*flow coefficient*	*m^3/h*
Q	*flow rate*	*Nm^3/h*
d	*density*	*Kg / m^3*
T	*Absolute temperature*	*°K (°C +273)*
P1	*Upstream pressure*	*bar*
P2	*Downstream pressure*	*bar*
ΔP	*Upstream-downstream dif*	*bar*

MOUNTING AND MAINTENANCE INSTRUCTIONS

1 - Assembly

1.1 - Before any installation, isolate the upstream and downstream pipes, depressurize the pipeline and bring the installation at room temperature.
1.2 - Install an isolation valve upstream and another downstream.
1.3 - Carefully clean the piping of any particles or shavings by rinsing with water or a air blowing.
1.4 - Install the filter in accordance with the direction of the arrow indicated on the body.
1.5 - Orient the filter so that the purge plug is located at the lowest point of the pipe.
1.6 - Use flange gaskets suitable for the fluid.
1.7 - Tighten the flange bolts crosswise.
1.8 - If the filter needs to be cleaned frequently, install a drain tap in place of the cap reference (6).
1.9 - Put into service with gradual pressurization.

2 - Maintenance

2.1 - Before any intervention, isolate the upstream and downstream pipes using the valves provided for this purpose.
2.2 - Depressurize the pipeline and bring the installation to room temperature.
2.3 - Unscrew the drain cap (6) and drain the remaining fluid at the bottom of the filter.
2.4 - Remove the bonnet reference (2).
2.5 - Remove the strainer screen (3). Depending on its condition, clean or replace it.
2.6 - Replace the bonnet reference (2).
2.7 - Screw the drain cap back on (6).
2.8 - Return to service with gradual pressurization.

SPARE PARTS

DN	50	65	80	100	125	150	200
Body gasket	SF9801155	SF9801156	SF9801157	SF9801158	SF9801159	SF9801155	SF9801155
150 µm strainer	contact us						