SIZE DATA

SF 2 WAY FEMALE CONNECTIONS

CODE	A	N° MICRO SWITCH	PN
7.001.01574	G1/2"	-	10
7.001.01603	G3/4"	-	10
7.001.01639	G1"	-	10
7.001.01586	G1/2"	1	10
7.001.01618	G3/4"	1	10
7.001.01654	G1"	1	10

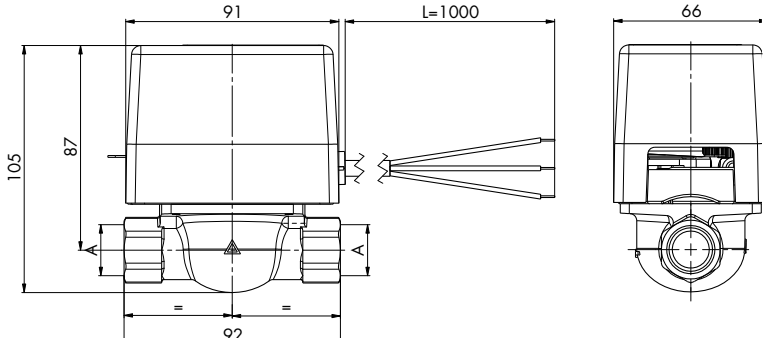

SF 2 WAY MALE CONNECTIONS

CODE	A	N° MICRO SWITCH	PN
7.001.01724	G1/2" B	-	10
7.001.02066	G3/4" B	-	10
7.001.02283	G1" B	-	10
7.001.02517	G1/2" B	1	10
7.001.02286	G3/4" B	1	10
7.001.02195	G1" B	1	10

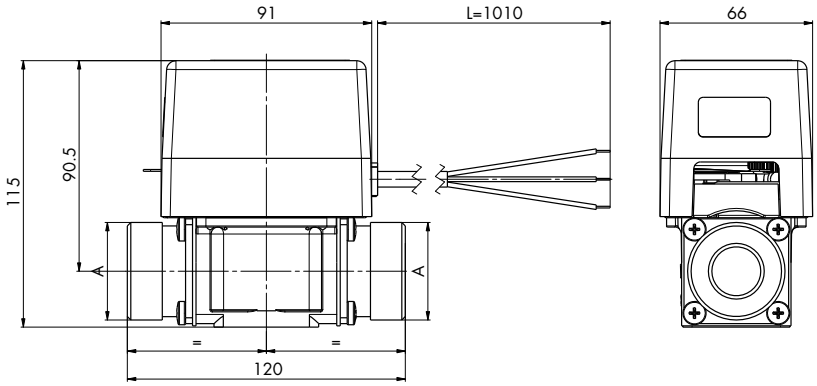

SF 2 WAY CONNECTIONS FOR COPPER PIPES

CODE	A	B	N° MICRO SWITCH	PN
7.001.01693	Ø15	107	-	10
7.001.01682	Ø16	107	-	10
7.001.01704	Ø20	107	-	10
7.001.02844	Ø25	120	-	10
7.001.01699	Ø15	107	1	10
7.001.01685	Ø16	107	1	10
7.001.02777	Ø20	107	1	10
7.001.02778	Ø25	120	1	10

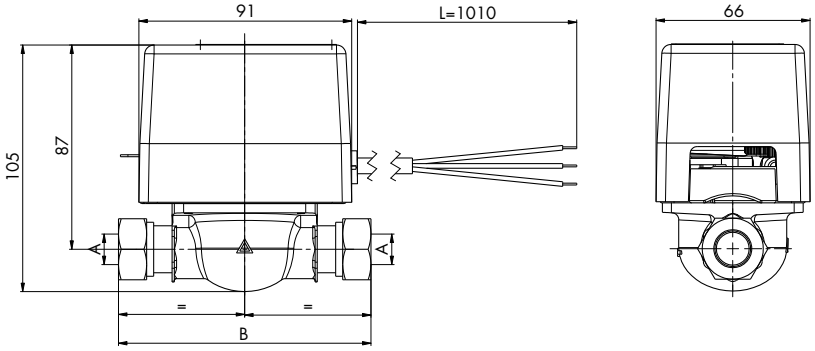

SF 2 WAY WITH FLANGES

CODE	A	N° MICRO SWITCH	PN
7.030.00321	G 1"1/4 B	-	10
7.030.00349	G 1"1/4 B	1	10

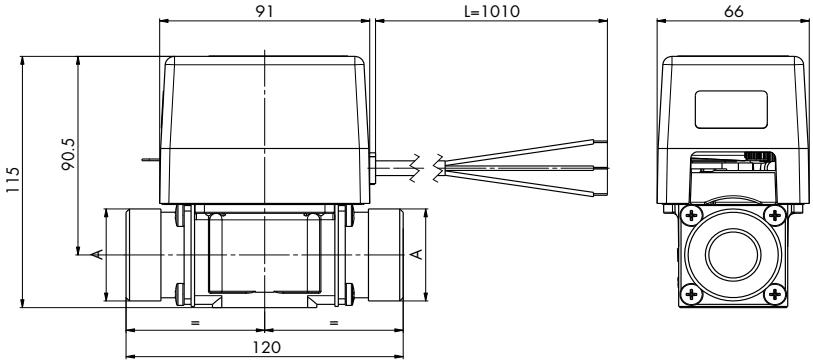

2 | 230 V | CABLE INCLUDED

- MALE CONNECTIONS
- AVAILABLE WITH 24 V AND 110 V MOTOR

SF 2 WAY

ZONE VALVE WITH SPRING RETURN CLICK - CLOCK

CODE	MODEL	DESCRIPTION	SIZE	PN	KVS	PACK	PACKAGING
7.001.01724	SF 15-2 E	2-way valve - 230 V - Male Gas connections	1/2"	10	6,0	1	5
7.001.02066	SF 20-2 E	2-way valve - 230 V - Male Gas connections	3/4"	10	8,0	1	5
7.001.02283	SF 25-2 E	2-way valve - 230 V - Male Gas connections	1"	10	10,0	1	5
7.001.02517	SF 15-2 E M1	2-way valve - 230 V Male gas connections with auxiliary micro	1/2"	10	6,0	1	5
7.001.02286	SF 20-2 E M1	2-way valve - 230 V Male gas connections with auxiliary micro	3/4"	10	8,0	1	5
7.001.02195	SF 25-2 E M1	2-way valve - 230 V Male gas connections with auxiliary micro	1"	10	10,0	1	5

SPECIFICATIONS

- For heating and air conditioning systems
- All the valves in the SF series can be supplied with 24 V and 110 V motors (+20 € from list price)
(for the codes, contact MUT) - Minimum order 5 pcs.