ADL APPENDAGES

REF. 1112

METAL SEAT CONCENTRIC WAFER BUTTERFLY VALVES EXCELLENCE RANGE TTV INCOMPLETE TIGHTNESS STAINLESS STEEL BODY

Wafer butterfly valves TTV excellence range for closing or setting networks of high temperature smokes, powders.
Metal seat, incomplete tightness.
10 Years warranty.
Stainless steel body and disc and cast iron/aluminium handle.
Between flanges PN10, PN16 or Class 150 according to the DN.
Compatible with explosive atmosphere, ATEX Zone 1&21 and Zone 2&22 on request.
Handling possible with stainless steel handle, gearbox or, chain gearbox and stem extension.
Thanks to the ISO 5211 plate and the square stem, an actuator can be installed direct on the valve (up to DN400).

SIL3 IEC 61508 / IEC 61511

Certificate 3.1

Lloyd's Register PED/2014/68/UE

WARRANTY 10 years MANUFACTURE *

Size :	DN40 to DN1400
Connection :	Between flanges PN10/16 and Class 150 (PN20)
Min Temperature :	-30°C
Max Temperature :	+350°C
Max Pressure :	16 Bars up to DN300
Specifications :	Long neck for isolation Wafer type Full crossing stem ISO 5211 direct mounting pad
Materials :	Stainless steel body and disc ASTM A351 CF8M

*the installation defects and wear defects are not covered by the guarantee

ADL APPENDAGES

REF. 1112

METAL SEAT CONCENTRIC WAFER BUTTERFLY VALVES EXCELLENCE RANGE TTV INCOMPLETE TIGHTNESS STAINLESS STEEL BODY

SPECIFICATIONS :

- Long neck for isolation
- ISO 5211 mounting pad
- Wafer type
- Between flanges PN10/16 and Class 150 (PN20) up to DN400 included (over on request)
- Between flanges PN10 from DN450 to DN1400
- Crossing stem
- **Incomplete tightness , loss factor : 2% of Kvs**
- Stainless steel disc
- 9 positions lever up to DN200, stop in all positions over, locking device in opened or closed position from DN32 to DN300
- Stem extension 75 mm length (option)
- Square lever 30x30 mm for special key (option)

USE :

- High temperature smokes, powders
- Min and max Temperature Ts : - 30°C to + 350°C
  (* : higher temperature on request)
- Max Pressure Ps : 16 bars up to DN300 , 10 bars over
- **Not for steam**

RANGE :

- With lever from DN 40 to DN 300
- Naked stem from DN 350 to DN1400
- IP65 Gear box possible (**Ref. 1197**) from DN 40 to DN 1400
- IP65 chain gear box possible (**Ref. 1194**) from DN 40 to DN 500
- On request, stem extension with special length (**Ref. 98665**)
- On request, stainless steel lever and bolting (**Ref. 9831250-9831264**)

CONNECTION :

- Between flanges PN10-PN16 and Class 150 (PN20) up to DN400
- Between flanges PN10 from DN450 to DN 1400

TORQUE VALUES (in Nm without safety coefficient) at 10 Bars for temperature under 180°C :

DN	40	50	65	80	100	125	150	200	250	300	350	400
Torque (Nm)	5	5	5	5	5	10	10	15	25	35	35	45

DN	450	500	600	700	750	800	900	1000	1100	1200	1300	1400
Torque (Nm)	120	140	300	360	420	480	600	900	1000	1100	1200	1300

TORQUE VALUES (in Nm without safety coefficient) at 10 Bars for temperature over 180°C :

DN	40	50	65	80	100	125	150	200	250	300	350	400
Torque (Nm)	5	5	10	15	25	45	60	80	110	120	140	160

DN	450	500	600	700	750	800	900	1000	1100	1200	1300	1400
Torque (Nm)	250	300	450	950	1050	1100	1150	1200	1300	1800	1900	2000

METAL SEAT CONCENTRIC WAFER BUTTERFLY VALVES EXCELLENCE RANGE TTV INCOMPLETE TIGHTNESS STAINLESS STEEL BODY

MAXIMUM TIGHTENING TORQUES FOR BOLTING FLANGES :

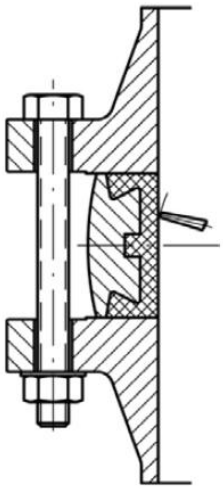

		Maximum torques (Nm)			
	Bolting types	5,6 / A307 Gr.B	8,8 / A193 B7	10,9	12,9
Bolting DN	M12 (1/2'')	41,16	84,28	117,6	142,1
	M14 (9/16'')	66,64	132,3	186,2	225,4
	M16 (5/8'')	102,9	205,8	289,1	347,9
	M18 (3/4'')	142,1	284,2	396,9	475,3
	M20 (3/4'')	196	401,8	568,4	676,2
	M22 (7/8'')	259,7	539	764,4	911,4
	M24 (1'')	338,1	695,8	980	1176
	M27 (1''1/8)	499,8	1029	1470	1764
	M30 (1''1/4)	666,4	1421	1960	2352

ADL APPENDAGES

REF. 1112

METAL SEAT CONCENTRIC WAFER BUTTERFLY VALVES EXCELLENCE RANGE TTV INCOMPLETE TIGHTNESS STAINLESS STEEL BODY

FLOW COEFFICIENT Kv (m3 / h) :

DN	Opening angle									
	0°	10°	20°	30°	40°	50°	60°	70°	80°	90°
32-40	2	3	5	9	20	29	40	52	64	81
50	3	3	7	16	25	43	69	109	169	189
65	5	5	8	12	25	55	90	161	184	231
80	7	6	14	33	60	101	179	248	323	413
100	10	10	24	55	100	169	269	398	597	721
125	14	22	40	90	170	267	428	646	875	1144
150	19	32	55	124	233	373	616	995	1393	1692
200	21	40	105	237	368	637	1095	1641	2487	2885
250	23	49	164	378	646	995	1692	2686	3979	4526
300	34	79	248	547	886	1542	2537	3979	5472	6745
350	76	100	324	697	1266	2090	3183	4974	7660	9406
400	88	129	417	896	1671	2666	4079	6963	8953	12259
450	95	159	547	1174	1990	3382	5472	8953	10942	14822
500	142	199	682	1442	2686	4377	6764	10942	14424	18426
600	198	299	965	2090	3780	6118	8953	15916	21388	26152
700	257	398	1194	2686	4974	7441	13430	20791	28300	37315
750	287	447	1294	3084	5173	8456	13728	22282	34319	40288
800	302	547	1791	3979	7262	10942	17906	31832	39666	51578
900	388	1095	2188	4875	8854	13927	21388	36408	48743	58934
1000	415	1891	3084	5770	9849	16911	26361	46753	57696	76020
1100	501	2090	3482	7958	12932	20890	29843	49738	69222	93755
1200	588	2885	4974	11937	19895	29843	44764	67643	87041	111958
1300	664	3183	5969	14921	24869	37801	54711	84554	100470	137755
1400	874	3780	6963	15916	25864	39790	62669	97486	109920	159160

HEAD LOSS CALCULATIONS :

$\Delta p = (Q / Kv)^2 \times SG$

Q : flow in m³/h

Δp : Head loss in bar

SG : Specific gravity (= 1 for water)

Kv : Volume of water in m³/h, that will flow through a given restriction or valve opening with a pressure drop of 1 bar at 20ºC)

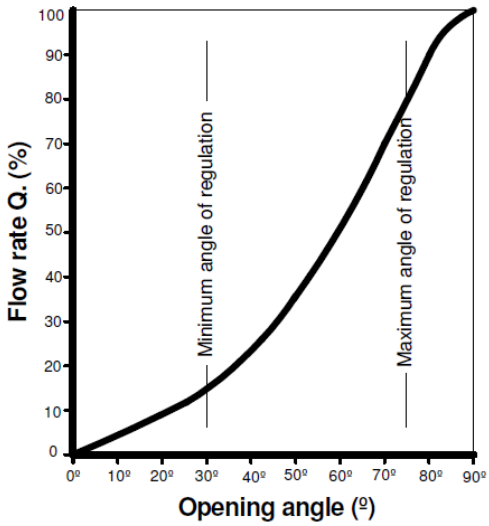

ADL APPENDAGES

REF. 1112

METAL SEAT CONCENTRIC WAFER BUTTERFLY VALVES EXCELLENCE RANGE TTV INCOMPLETE TIGHTNESS STAINLESS STEEL BODY

MATERIALS DN 40 - 200 :

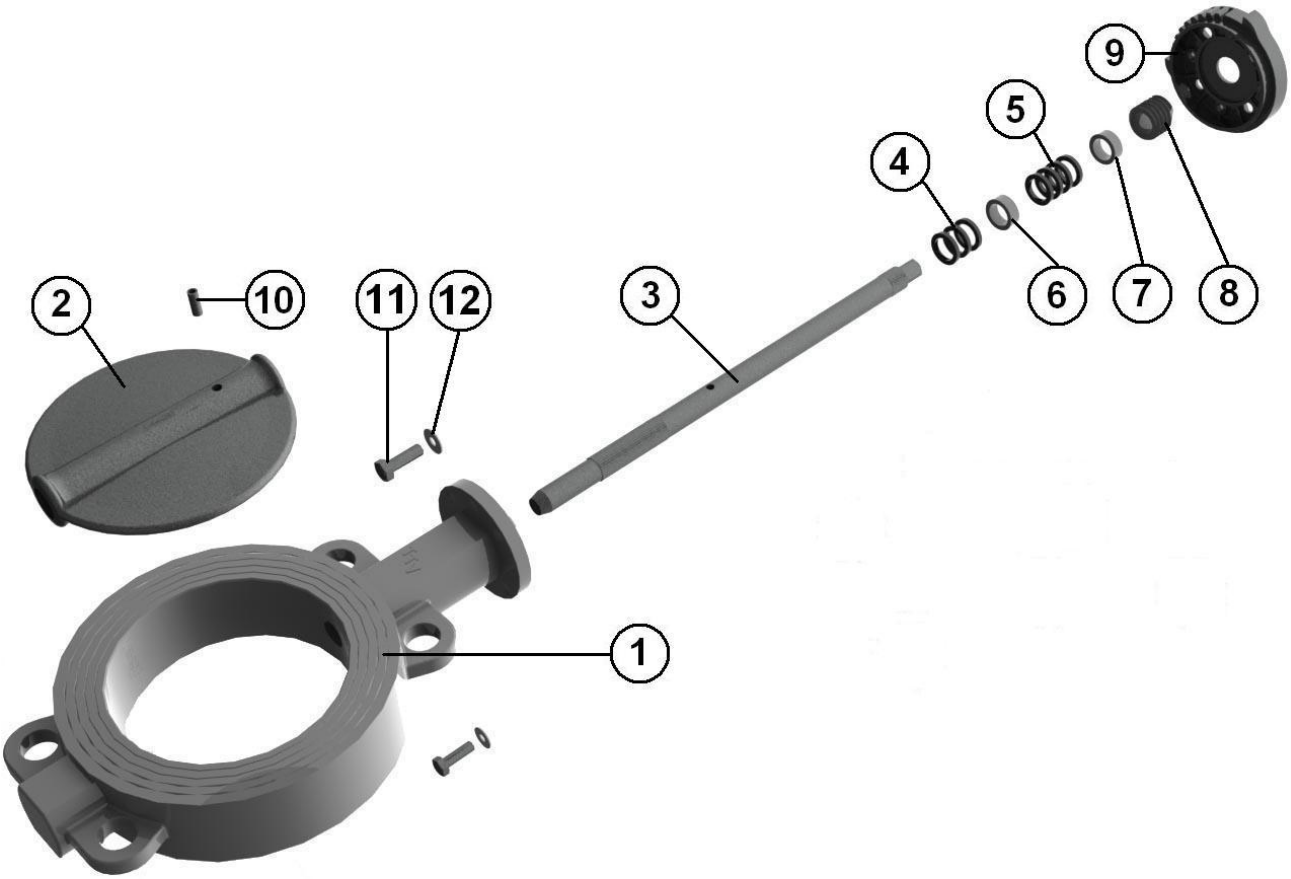

Item	Designation	Materials
1	Body	ASTM A351 CF8M
2	Disc	
3	Stem	AISI 316
4	Gasket	FILAM. GRAPHITE
5	Gasket	
6	Ring	AISI 316
7	Ring	
8	Socket	
9	Plate	ASTM A351 CF8M
10	Pin	AISI 316
11	Screw	A4
12	Washer	AISI 316l
	Lever	Aluminium ADC10 with epoxy painting 50µ thickness

METAL SEAT CONCENTRIC WAFER BUTTERFLY VALVES EXCELLENCE RANGE TTV INCOMPLETE TIGHTNESS STAINLESS STEEL BODY

MATERIALS DN 250 - 400 :

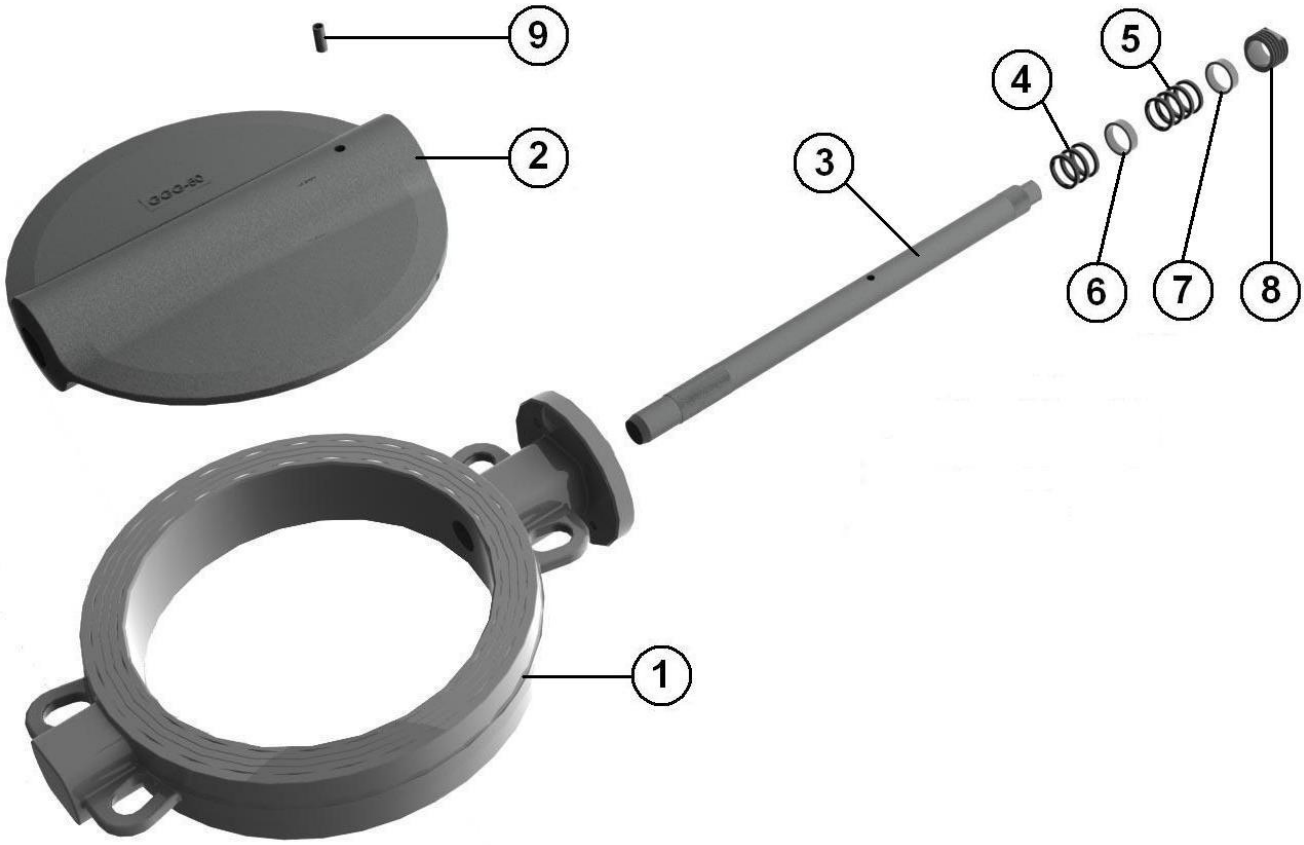

Item	Designation	Materials
1	Body	ASTM A351 CF8M
2	Disc	
3	Stem	AISI 316
4	Gasket	FILAM. GRAPHITE
5	Gasket	
6	Ring	AISI 316
7	Ring	
8	Socket	
9	Pin	
Lever (up to DN300)		Ductile iron EN GJS-500-7 with epoxy painting 50µ thickness

METAL SEAT CONCENTRIC WAFER BUTTERFLY VALVES EXCELLENCE RANGE TTV INCOMPLETE TIGHTNESS STAINLESS STEEL BODY

MATERIALS DN 450 - 1400 :

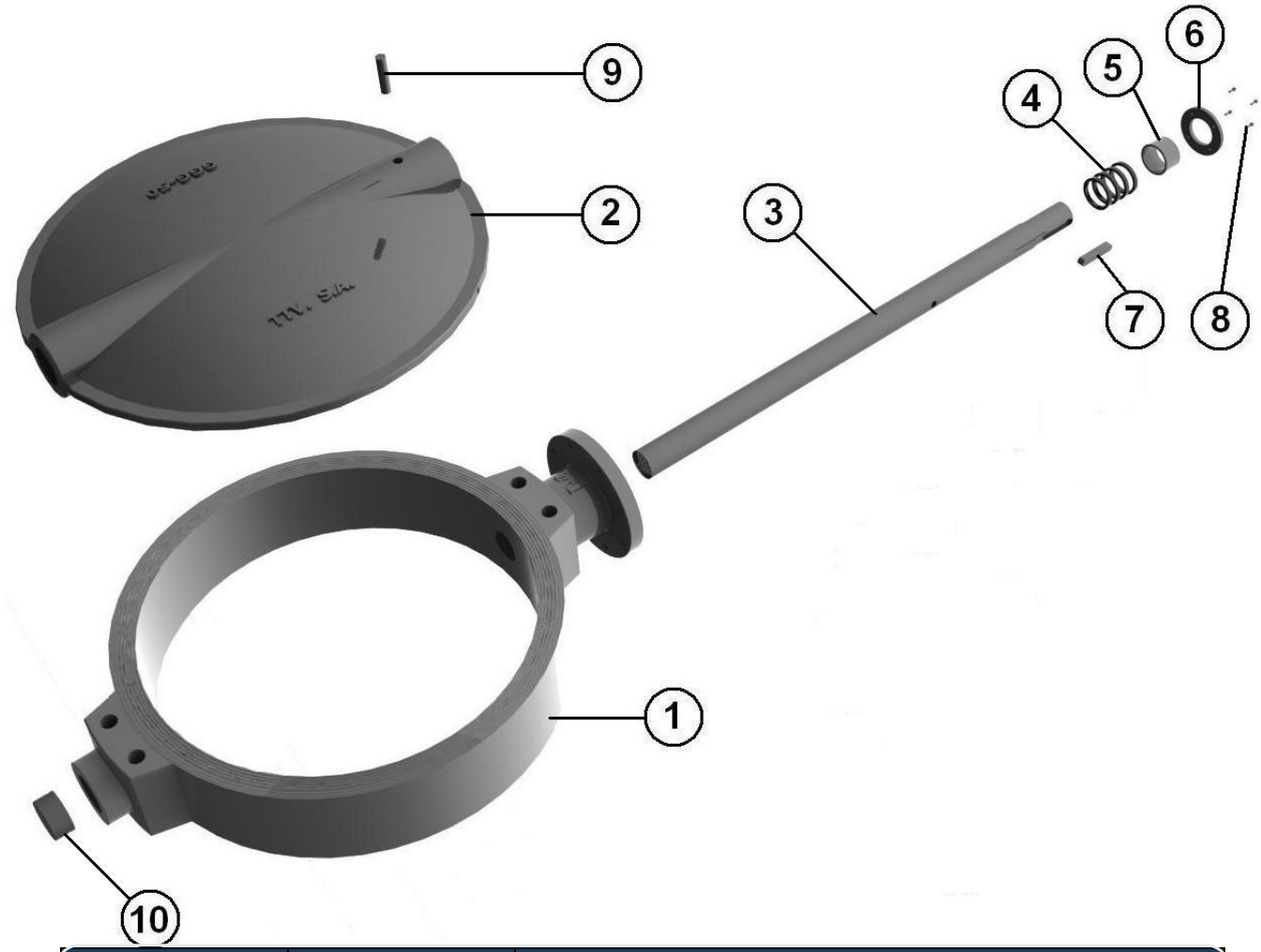

Item	Designation	Materials
1	Body	ASTM A351 CF8M
2	Disc	
3	Stem	AISI 316
4	Gasket	FILAM. GRAPHITE
5	Ring	AISI 316
6	Ring	
7	Pin	
8	Screw	
9	Pin	
10	Ring	

METAL SEAT CONCENTRIC WAFER BUTTERFLY VALVES EXCELLENCE RANGE TTV INCOMPLETE TIGHTNESS STAINLESS STEEL BODY

GEARBOX MATERIALS REF. 1197 :

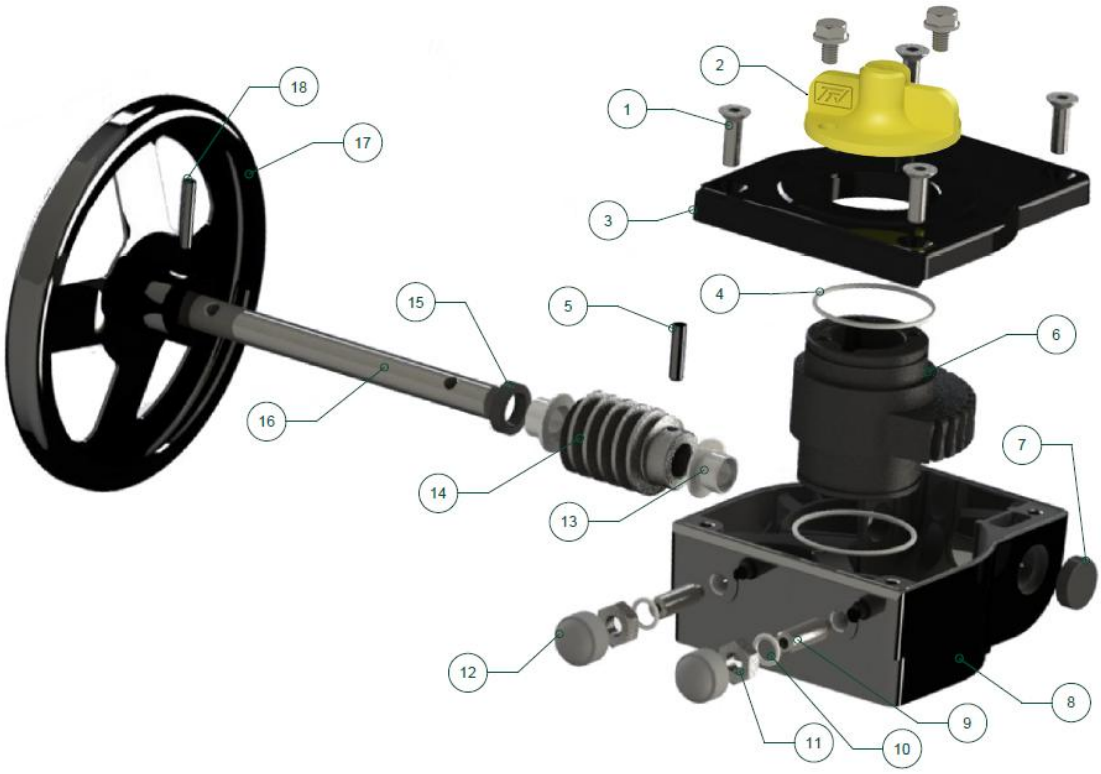

Item	Designation	Materials Ref. 1197
1	Screw	AISI 304
2	Indicator	PVC
3	Cover	Aluminium
4	O ring	NBR
5	Pin	Carbon steel
6	Quadrant	Ductile iron EN GJS-400-15
7	Gasket	NBR
8	Body	Aluminium
9	Adjusting bolt	Carbon steel
10	Washer	Galvanized steel
11	Nut	Galvanized steel
12	Cap	NBR 70
13	Bushing	Bronze
14	Worm	Carbon steel 45
15	Gasket	NBR
16	Shaft	Carbon steel 45
17	Handwheem	Carbon steel
18	Pin	Carbon steel

ADL APPENDAGES

REF. 1112

METAL SEAT CONCENTRIC WAFER BUTTERFLY VALVES EXCELLENCE RANGE TTV INCOMPLETE TIGHTNESS STAINLESS STEEL BODY

SIZE (in mm) :

- **Valves DN 40 - 200 :**

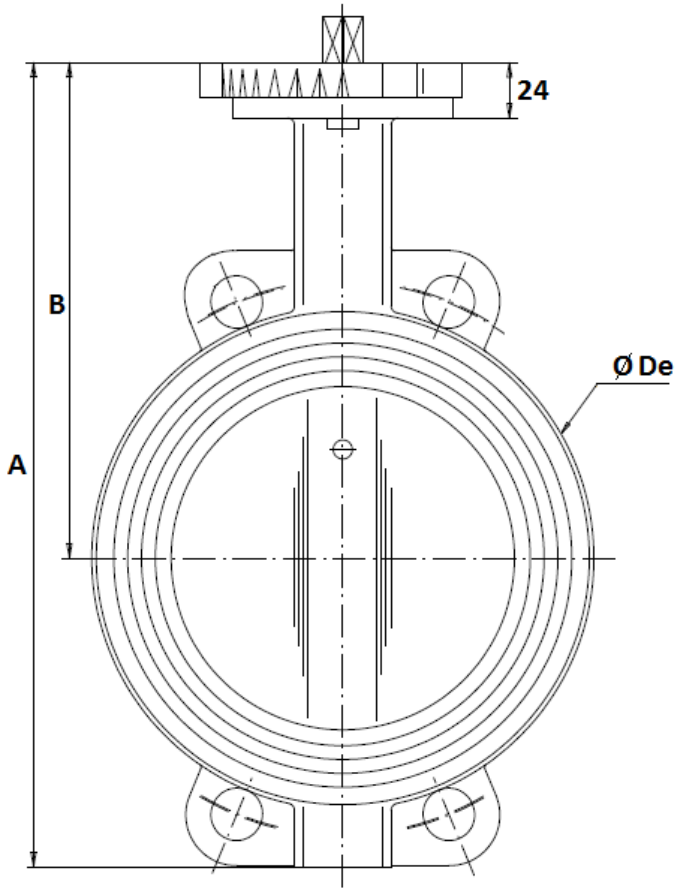

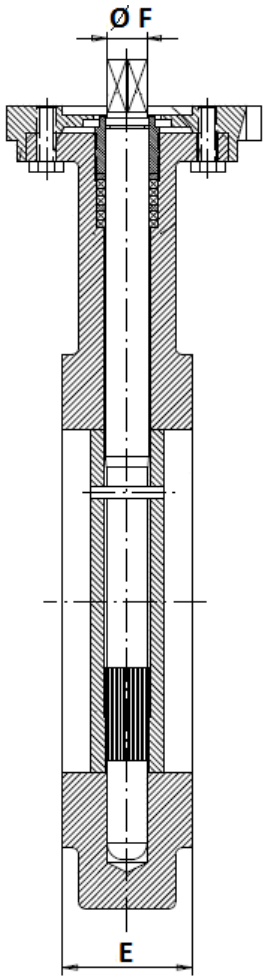

DN	40	50	65	80	100	125	150	200
A	205	228	248	265	298	331	349	430
B	140	156	161	169	187	206	215	255
Ø De	82	102	119	135	155	185	208	270
E	33	43	46	46	52	56	56	60
Ø F	9.5	9.5	12	14	14	17	17	21
Weight (Kg)	3.07	4.57	4.89	5.95	7.58	10.22	12.23	19

ADL APPENDAGES

REF. 1112

METAL SEAT CONCENTRIC WAFER BUTTERFLY VALVES EXCELLENCE RANGE TTV INCOMPLETE TIGHTNESS STAINLESS STEEL BODY

SIZE (in mm) :

- **Valves DN 250 -400 :**

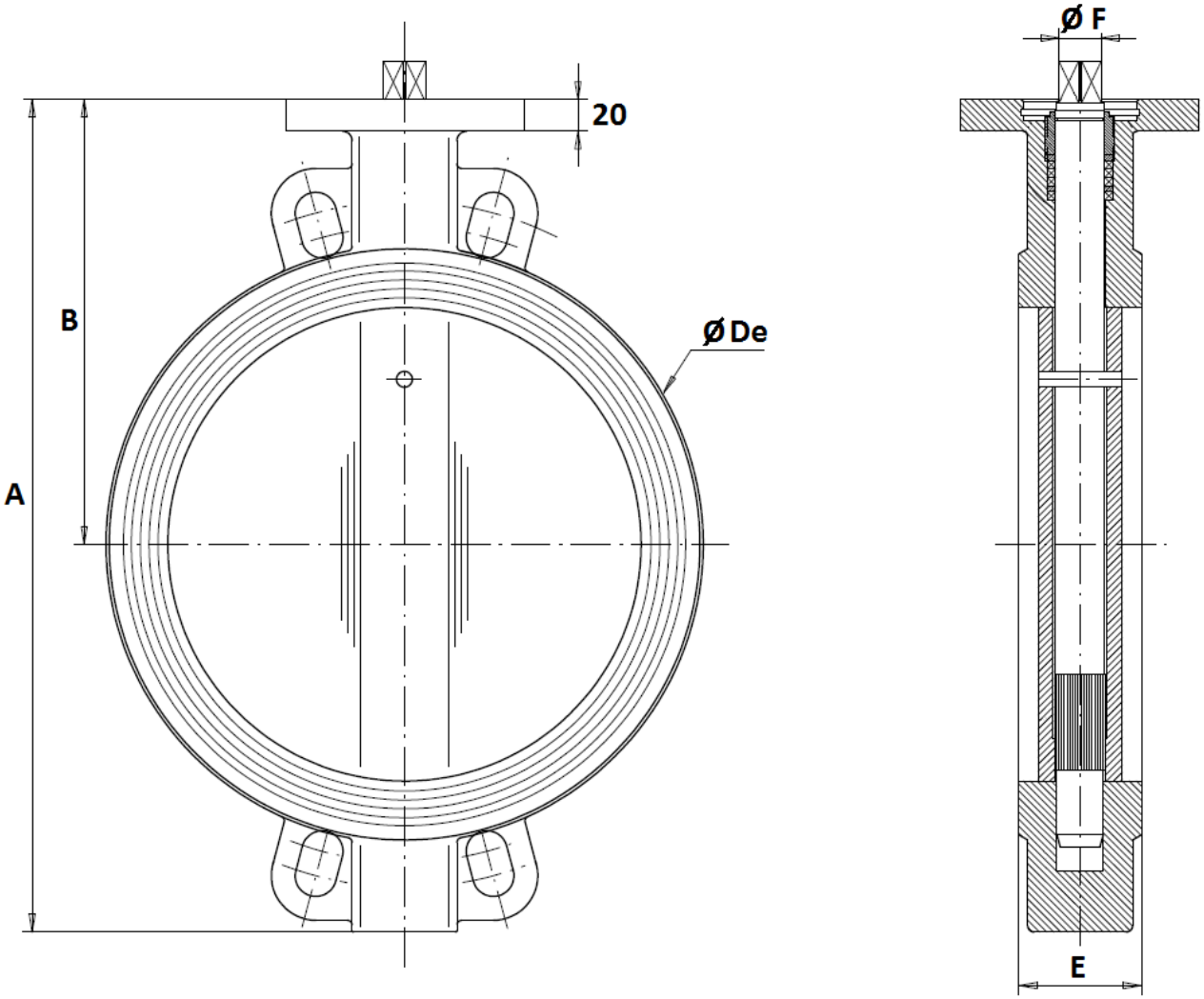

DN	250	300	350	400
A	461	524	570	644
B	248	280	300	340
Ø De	328	381	437	486
E	68	78	78	102
Ø F	23	26.5	26.5	33
Weight (Kg)	30	40	54	75

METAL SEAT CONCENTRIC WAFER BUTTERFLY VALVES EXCELLENCE RANGE TTV INCOMPLETE TIGHTNESS STAINLESS STEEL BODY

STANDARD LEVERS SIZE (in mm) :

DN 32 – 200 :

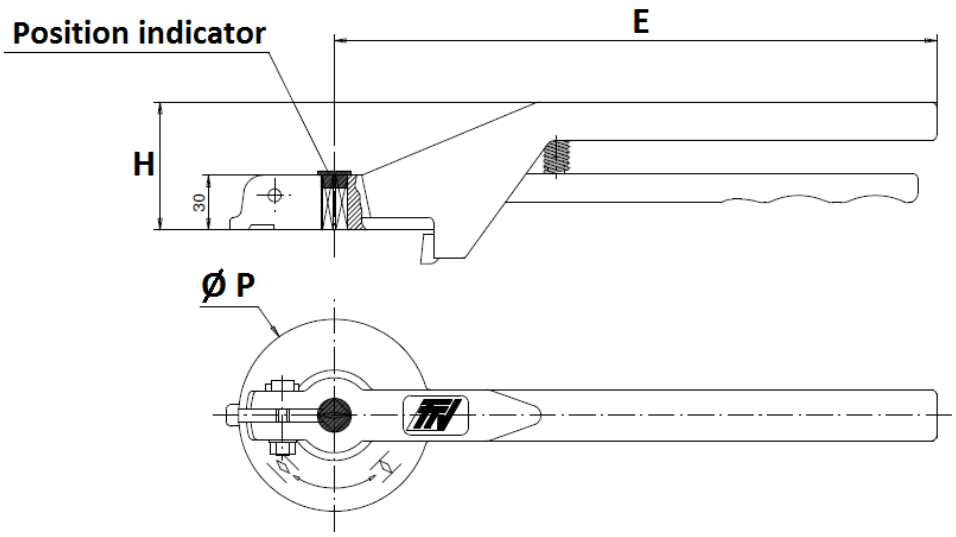

DN	32-100	125-200
E	205	330
H	57	70
Ø P	88	105

DN 250 – 300 :

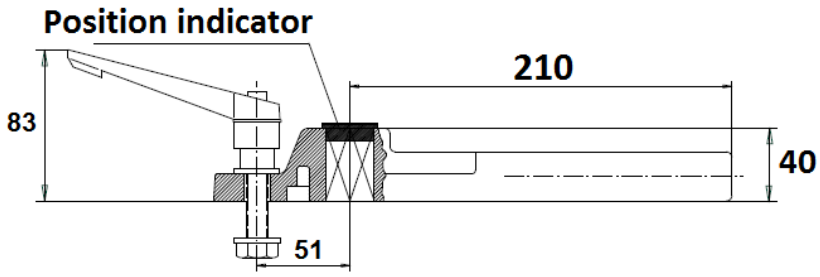

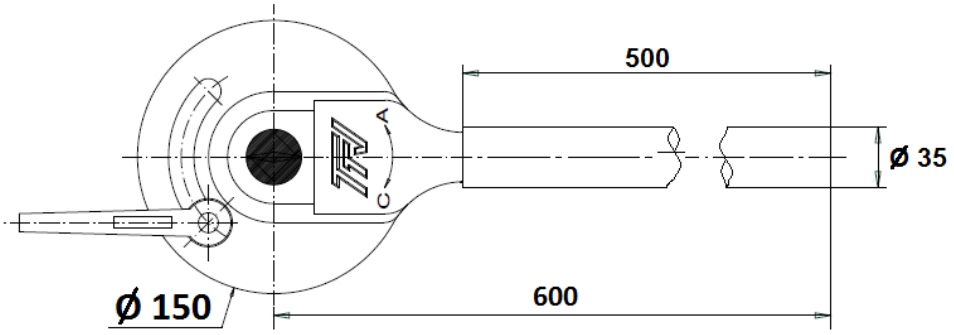

METAL SEAT CONCENTRIC WAFER BUTTERFLY VALVES EXCELLENCE RANGE TTV INCOMPLETE TIGHTNESS STAINLESS STEEL BODY

ASTM A351 CF8M STAINLESS STEEL LEVERS SIZE (in mm) (ON REQUEST) :

DN 40 - 100

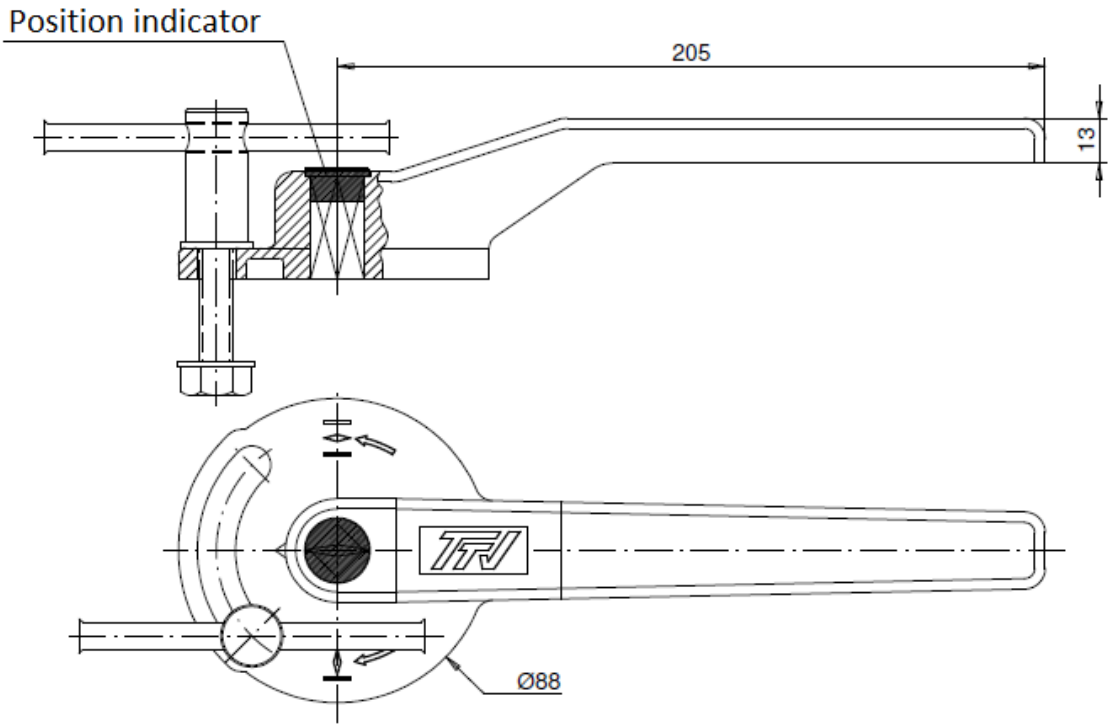

DN 125 - 200

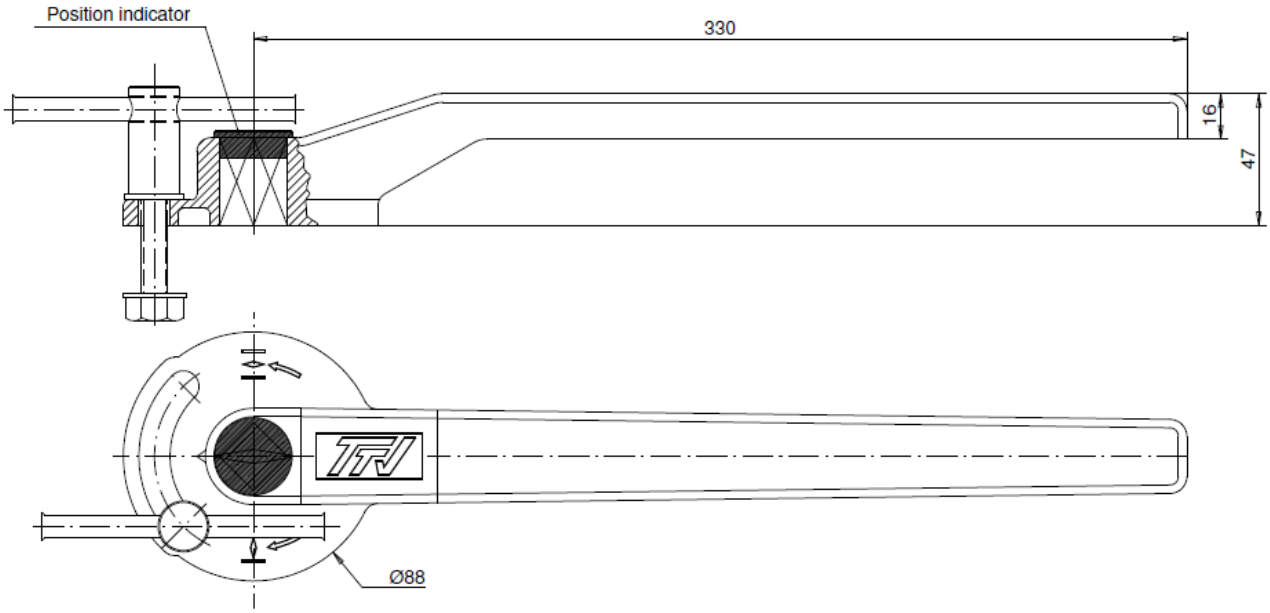

ADL APPENDAGES

REF. 1112

METAL SEAT CONCENTRIC WAFER BUTTERFLY VALVES EXCELLENCE RANGE TTV INCOMPLETE TIGHTNESS STAINLESS STEEL BODY

SIZE (in mm) :

- **Valves DN 450 - 1400 :**

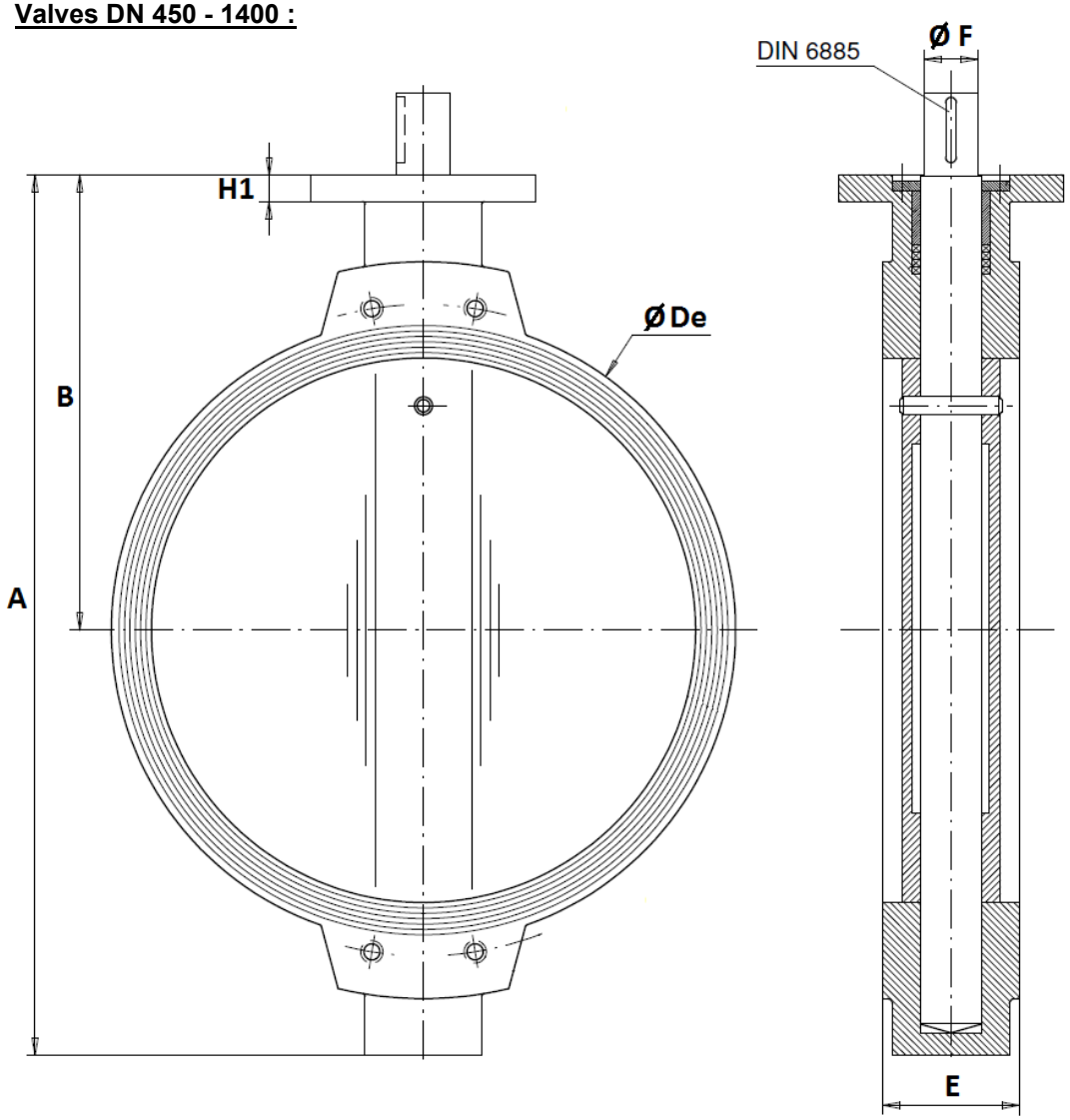

DN	450	500	600	700	750	800	900	1000	1100	1200	1300	1400
A	721	810	950	1085	1135	1233	1310	1442	1565	1706	1895	1975
B	390	440	507	575	600	655	685	754	815	873	1005	1025
Ø De	538	595	695	804	860	911	1010	1124	1225	1330	1460	1530
E	114	127	154	165	190	190	203	216	216	254	360	360
Ø F	50	50	60	60	65	65	80	80	80	100	120	120
Key (DIN6885)	14x9	14x9	18x11	18x11	20x12	20x12	22x14	22x14	22x14	28x16	32x18	32x18
H1	25	25	30	30	30	30	30	30	30	35	35	35
Weight (Kg)	87	117	177	258	296	330	505	661	840	1020	1650	1900

METAL SEAT CONCENTRIC WAFER BUTTERFLY VALVES EXCELLENCE RANGE TTV INCOMPLETE TIGHTNESS STAINLESS STEEL BODY

ISO MOUNTING PAD AND STEM SIZE DN 40 - 400 (in mm) :

DN 40 – 200

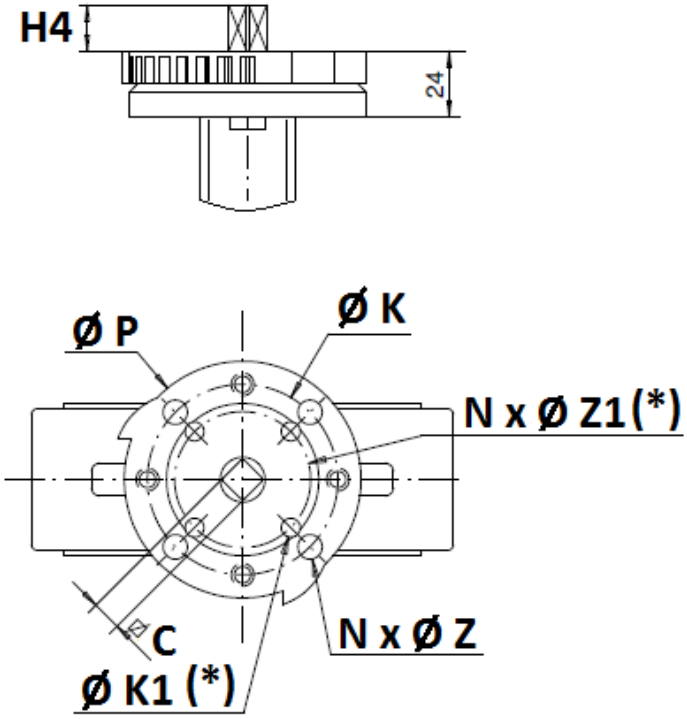

DN250 - 400

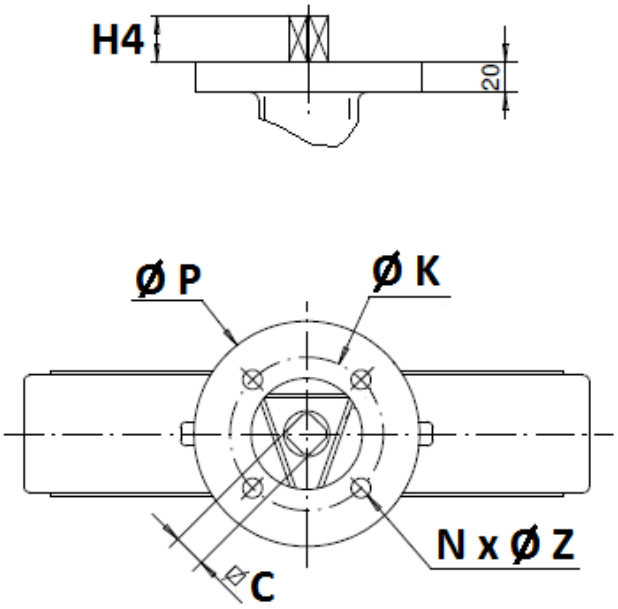

(*) : Only from DN32 to DN100 (see installation with ISO plate F05 page 15)

DN	32/40	50	65	80	100	125	150	200	250	300	350	400
H4	14		16		20			24			29	
C	8		9	11		14		17	19	22		27
Ø K	70								102		140	
ISO	F07								F10		F14	
N x Ø Z	4 x 9								4 x 11		4 x 18	
Ø K1	50					-						
ISO 1	F05											
N x Ø Z1	4 x 7											
Ø P	88					105			150		170	

ISO PLATE INSTALLATION FOR DN32-100 ISO F05 :

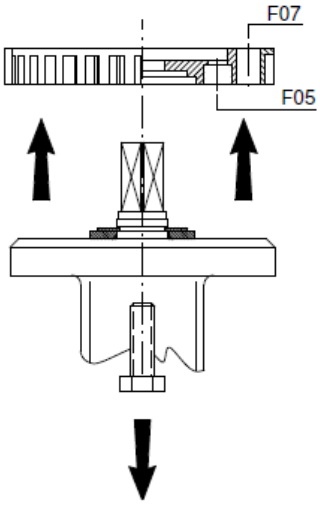

Unscrew and remove the flange

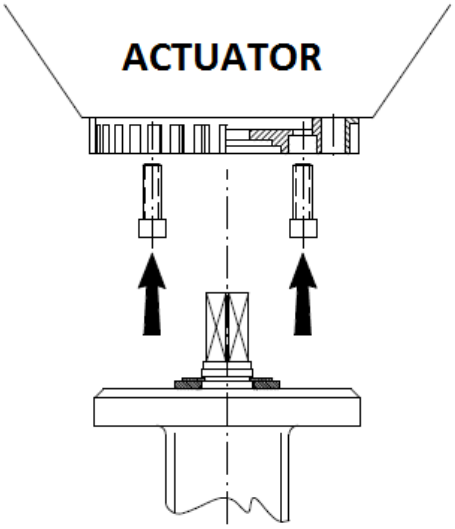

Screw the flange to the actuator with hexagon socket screws

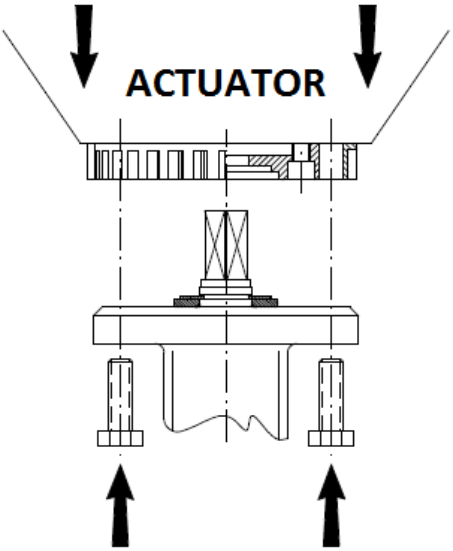

Screw the valve to the flange

METAL SEAT CONCENTRIC WAFER BUTTERFLY VALVES EXCELLENCE RANGE TTV INCOMPLETE TIGHTNESS STAINLESS STEEL BODY

ISO MOUNTING PAD AND STEM SIZE DN450-1400 (in mm) :

DN 450 - 1400

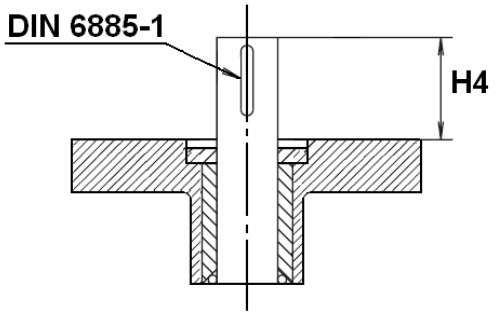

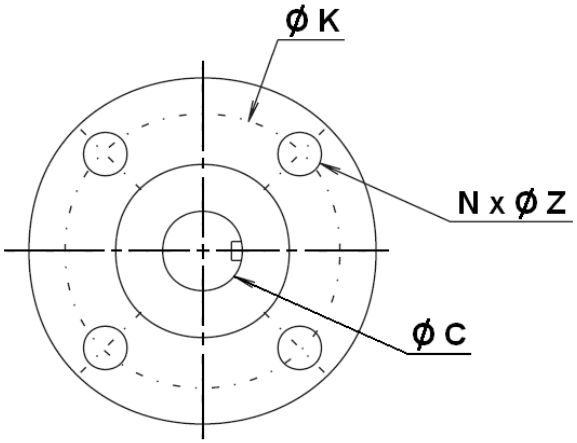

DN	450	500	600	700	750	800	900	1000	1100	1200	1300	1400
H4	80		90		110						120	
Ø C	50		60		65		80			100	120	
Ø K	140		165	254							298	
ISO	F14		F16	F25							F30	
N x Ø Z	4 x 18		4 x 22	8 x 18							8 x 22	
Ø P	175		250	300							350	

ADL APPENDAGES

REF. 1112

METAL SEAT CONCENTRIC WAFER BUTTERFLY VALVES EXCELLENCE RANGE TTV INCOMPLETE TIGHTNESS STAINLESS STEEL BODY

GEARBOX SIZE REF.1197 DN32-400 (in mm) :

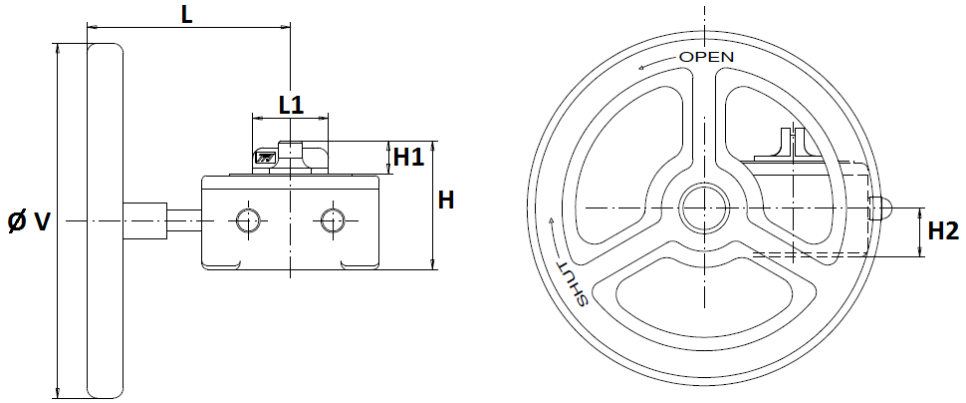

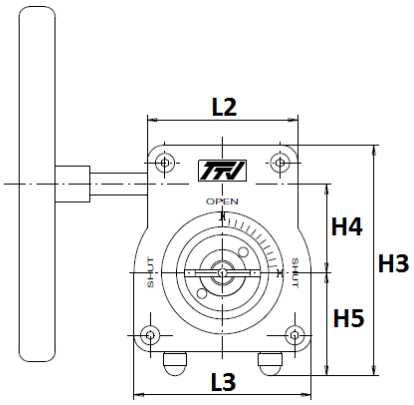

ISO plate size :

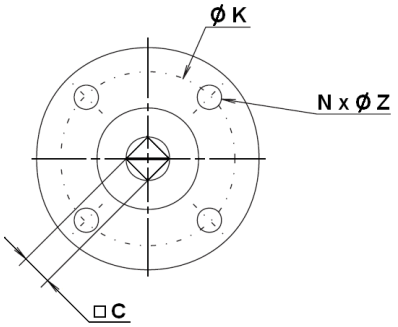

DN	32/50	65	80/100	125/150	200	250	300	350	400
L	115	115	115	115	115	223.5	223.5	325	325
L1	43	43	43	43	43	55	55	75	75
L2	85	85	85	85	85	110	110	150	150
L3	100	100	100	100	100	142	142	185	185
H	73	73	73	73	73	103	103	126	126
H1	19	19	19	19	19	33	33	32	32
H2	27.5	27.5	27.5	27.5	27.5	42	42	51	51
H3	130	130	130	130	130	176	176	224	224
H4	50	50	50	50	50	60	60	80	80
H5	58	58	58	58	58	82	82	98	98
Ø V	140	140	140	200	200	300	300	400	400
C	8	9	11	14	17	19	22	22	27
Ø K	70	70	70	70	70	102	102	140	140
ISO	F07	F07	F07	F07	F07	F10	F10	F14	F14
N x Ø Z	4 x M8	4 x M8	4 x M8	4 x M8	4 x M8	4 x M10	4 x M10	4 x M16	4 x M16
Weight (Kg)	1.35	1.35	1.35	1.75	1.75	4	4	9.5	9.5
Ref.	1197050	1197065	1197100	1197150	1197200	1197250	1197300	1197350	1197400

METAL SEAT CONCENTRIC WAFER BUTTERFLY VALVES EXCELLENCE RANGE TTV INCOMPLETE TIGHTNESS STAINLESS STEEL BODY

GEARBOX SIZE REF.1197 DN450-600 (in mm) :

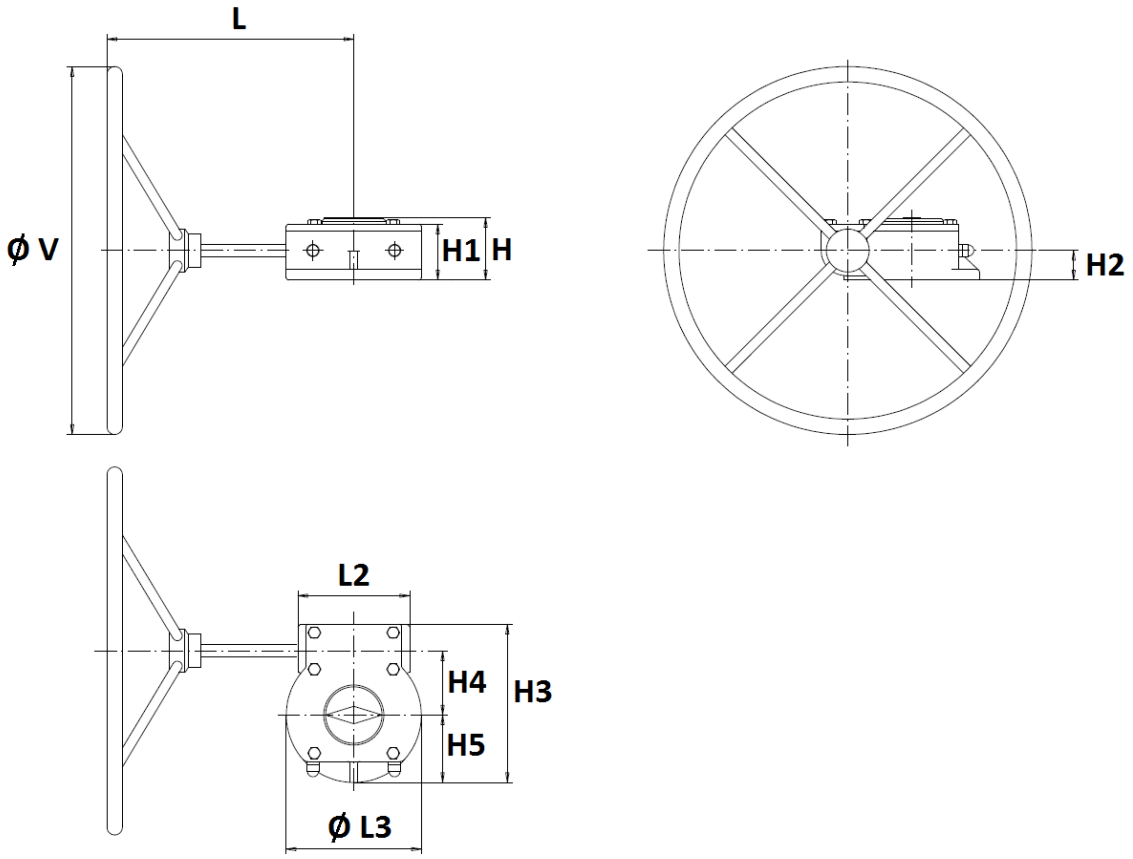

DN	450	500	600
L	381	402	447
L2	150	182	194
Ø L3	200	220	285
H	93	102	123.4
H1	82	91	109.5
H2	42	48	55
H3	226	258	322.5
H4	86	104.5	130
H5	100	110	142.5
Ø V	600	600	700
Weight (in Kg)	18.8	26.8	38.3
Ref.	1197451	1197501	1197601

ADL APPENDAGES

REF. 1112

METAL SEAT CONCENTRIC WAFER BUTTERFLY VALVES EXCELLENCE RANGE TTV INCOMPLETE TIGHTNESS STAINLESS STEEL BODY

GEARBOX SIZE REF.1197 DN700-1200 (in mm) :

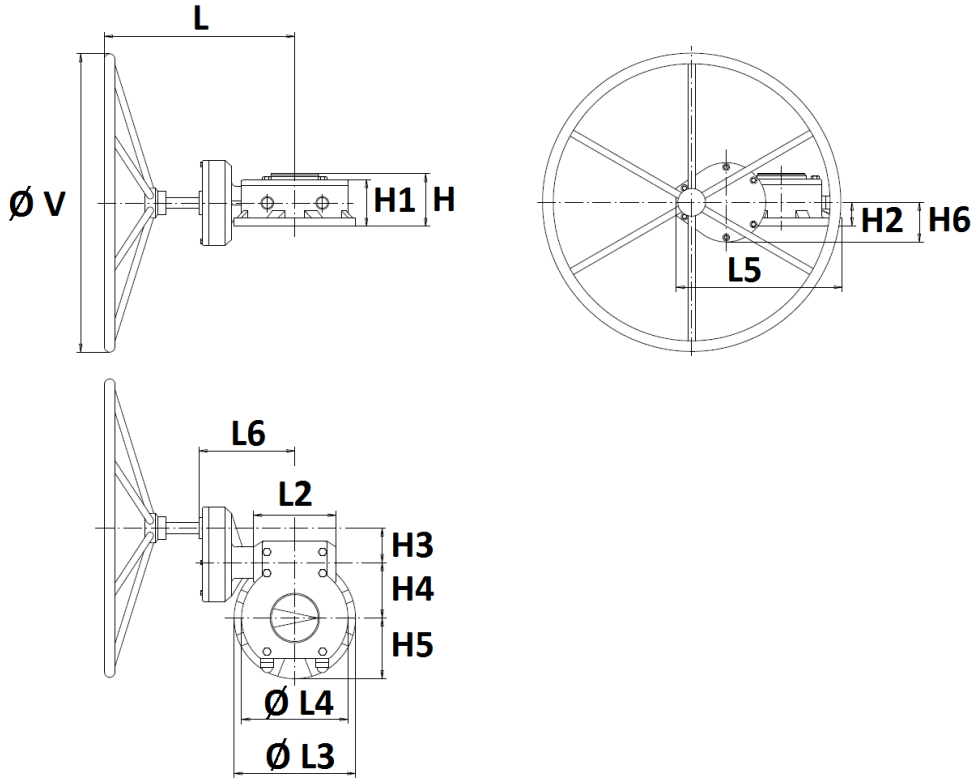

DN	700	750	800	900-1100	1200
L	447	447	447	500	556
L2	194	194	194	300	324
Ø L3	285	285	285	370	370
Ø L4	250	250	250	370	370
L5	389.5	389.5	389.5	469	574
H	123.4	123.4	123.4	138.9	139
H1	109.5	109.5	109.5		
H2	55	55	55	59	59
H3	81	81	81	81	175
H4	130	130	130	182	182
H5	142.5	142.5	142.5	170	170
H6	93	93	93	93	90
Ø V	500	500	700	600	800
Weight (Kg)	49	49	49	75	87
Ref.	1197700		1197800		

ADL APPENDAGES

REF. 1112

METAL SEAT CONCENTRIC WAFER BUTTERFLY VALVES EXCELLENCE RANGE TTV INCOMPLETE TIGHTNESS STAINLESS STEEL BODY

CHAIN GEARBOX SIZE REF.1194 (in mm) :

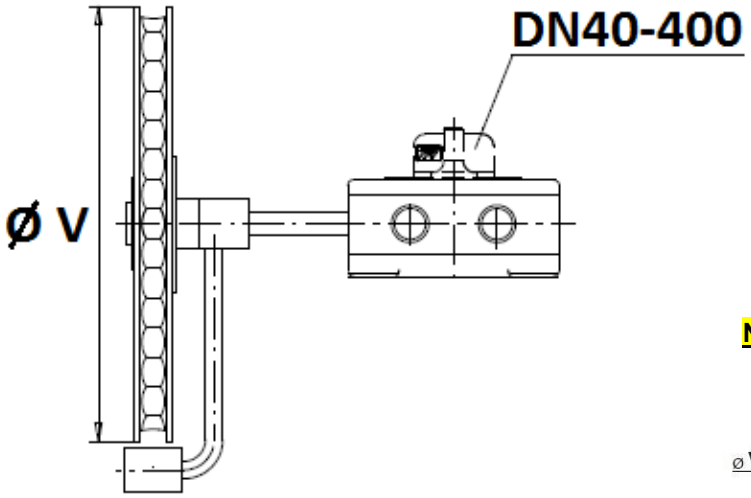

Chain size :

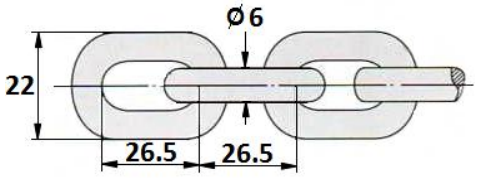

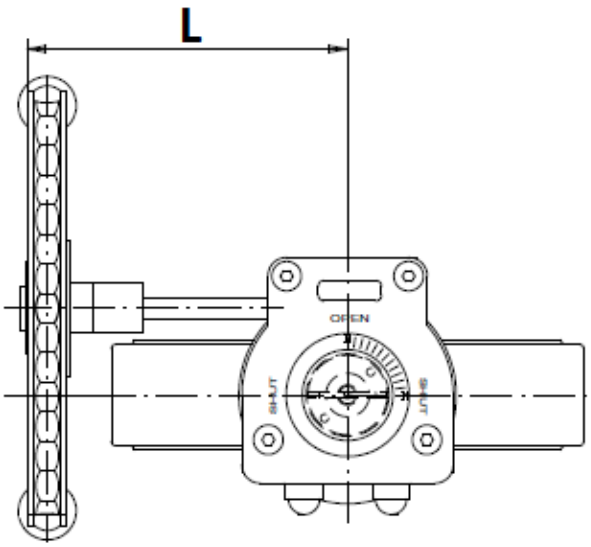

NEW TYPE (MODIFICATION IN PROGRESS) :

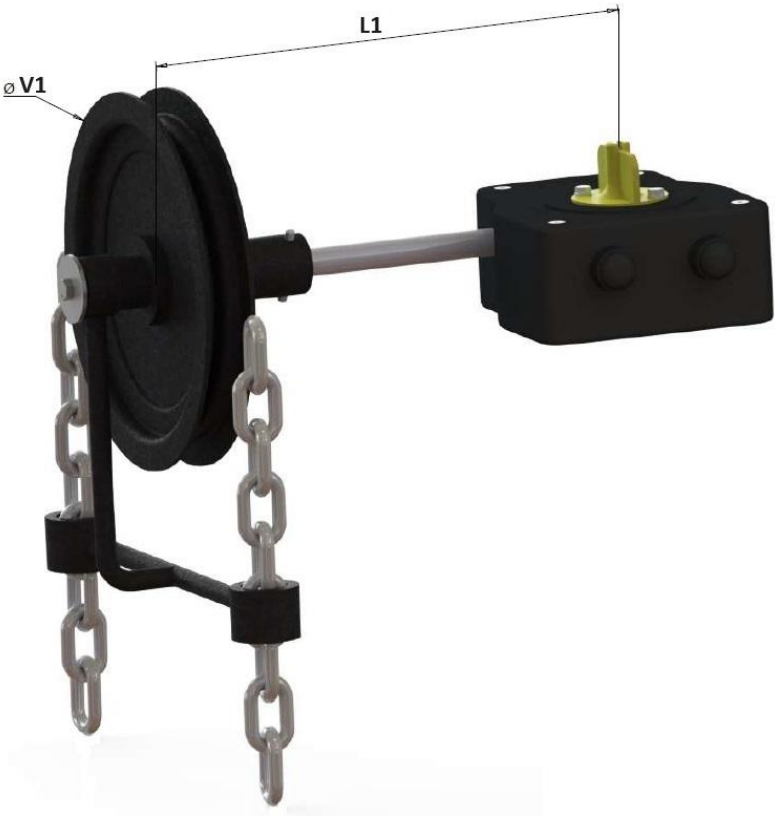

DN	32/50	65	80/100	125/150	200	250	300	350	400	450	500
L	120			215		325		331	352	350	365
L1	110					250		300			
Ø V	160			210		300		400		500	500
Ø V1											
Weight (in Kg)	2.35	2.35	2.35	2.75	2.75	6.8	6.8	14.3	14.3	26.2	33.7
Ref.	1194050	1194065	1194100	1194150	1194200	1194250	1194300	1194350	1194400		

ADL APPENDAGES

REF. 1112

METAL SEAT CONCENTRIC WAFER BUTTERFLY VALVES EXCELLENCE RANGE TTV INCOMPLETE TIGHTNESS STAINLESS STEEL BODY

GEARBOX SPECIFICATIONS :

DN	32/50	65	80/100	125/150	200	250	300	350
Ref.	1197050	1197065	1197100	1197150	1197200	1197250	1197300	1197350
Ratio factor	37 : 1	37 : 1	37 : 1	37 : 1	37 : 1	36 : 1	36 : 1	50 : 1
Number of cycles for opening or closing	9.25	9.25	9.25	9.25	9.25	9	9	12.5
Input torque (Nm)	9	9	9	9	9	18.5	18.5	32
Output torque (Nm)	250	250	250	250	250	500	500	1200

DN	400	450	500	600	700	800	900	1000
Ref.	1197400	1197451	1197501	1197601	1197700	1197800	-	-
Ratio factor	50 : 1	38 : 1	55 : 1	52 : 1	208 : 1	208 : 1	312 : 1	312 : 1
Number of cycles for opening or closing	12.5	9.5	13.75	13	52	52	78	78
Input torque (Nm)	32	56.8	64	115.4	43.6	43.6	53.4	53.4
Output torque (Nm)	1200	1620	2640	4500	6800	6800	12500	12500

DN	1200
Ratio factor	702 : 1
Number of cycles for opening or closing	175.5
Input torque (Nm)	32.3
Output torque (Nm)	17000

ADL APPENDAGES

REF. 1112

METAL SEAT CONCENTRIC WAFER BUTTERFLY VALVES EXCELLENCE RANGE TTV INCOMPLETE TIGHTNESS STAINLESS STEEL BODY

BETWEEN FLANGES SIZE (in mm) :

DN 32-200

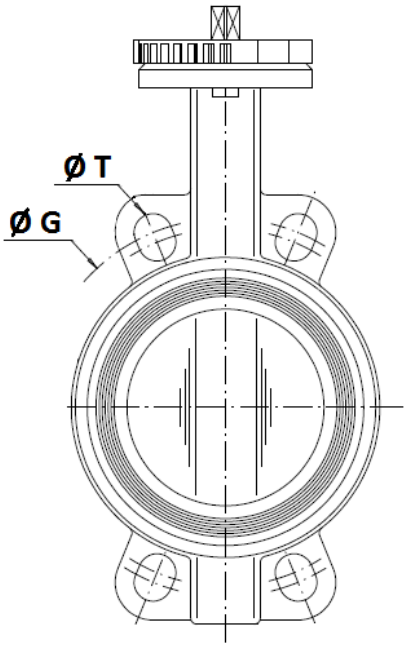

DN250 – 400

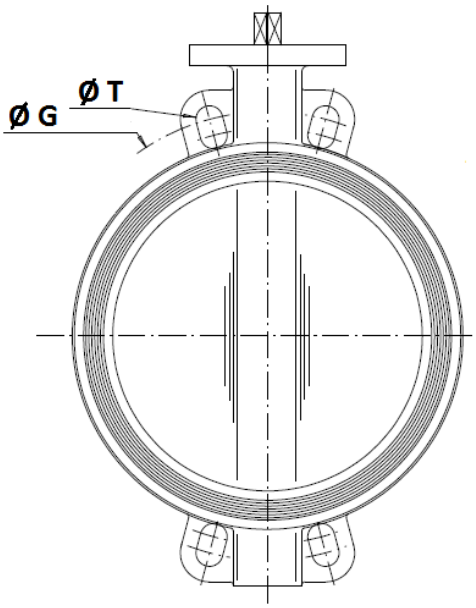

DN450-1400

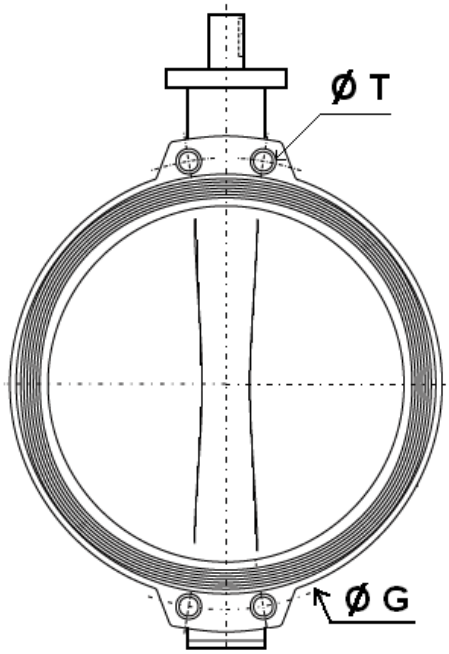

	DN (mm)	32	40	50	65	80	100	125	150	200	250	300	350	400
	NPS (")	1"1/4	1"1/2	2"	2"1/2	3"	4"	5"	6"	8"	10"	12"	14"	16"
PN10	Ø G	100	110	125	145	160	180	210	240	295	350	400	460	515
	Ø T	18	18	18	18	18	18	18	23	23	23	23	23	27
PN16	Ø G	100	110	125	145	160	180	210	240	295	355	410	470	525
	Ø T	18	18	18	18	18	18	18	23	23	27	27	27	30
Class 150	Ø G	88.9	98.5	120.6	139.7	152.4	190.5	215.9	241.3	298.5	362	431.8	476.3	539.8
	Ø T	16	16	19	19	19	19	23	23	23	26	26	29	29

	DN (mm)	450	500	600	700	750	800	900	1000	1100	1200	1300	1400
	NPS (")	18"	20"	24"	28"	30"	32"	36"	40"	44"	48"	52"	56"
PN10	Ø G	565	620	725	840	900	950	1050	1160	1270	1380	-	1590
	Ø T	M24	M24	M27	M27	M30	M30	M30	M33	M33	M36	-	M39
PN16	Ø G	585	650	770	840	900	950	1050	1170	1270	1390	-	1590
	Ø T	M27	M30	M33	M33	M33	M36	M36	M39	M39	M45	-	M45
Class 150	Ø G	577.9	635	749.3	863	914	978	1086	1200	1314	1422	1537	1651
	Ø T (BSW)*	1 1/8"	1 1/8"	1 1/4"	1 1/4"	1 1/4"	1 1/2"	1 1/2"	1 1/2"	1 1/2"	1 1/2"	1 3/4"	1 3/4"
	Ø T (Metric)	M30	M30	M33	M33	M33	M39	M39	M39	M39	M39		

* Threaded BSW on standard, on request metric threaded for Class 150

ADL APPENDAGES

REF. 1112

METAL SEAT CONCENTRIC WAFER BUTTERFLY VALVES EXCELLENCE RANGE TTV INCOMPLETE TIGHTNESS STAINLESS STEEL BODY

NECK AND DISC SIZE (in mm) :

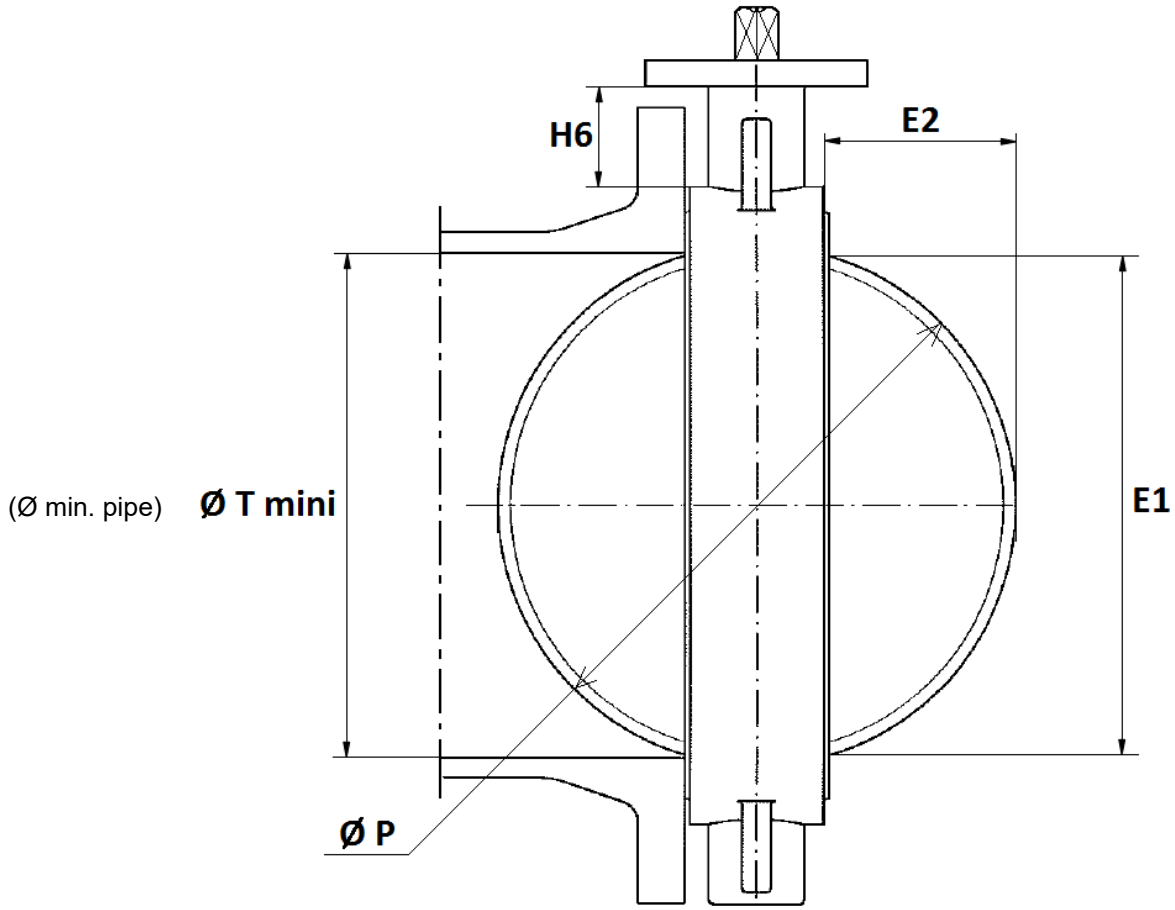

DN	32/40	50	65	80	100	125	150	200	250	300	350	400	450	500	600
E1	23	24.5	46	65	85	109	136	188	238	289	331	385	424	479	575
E2	3.5	3.5	9.5	17	24	33.5	45.5	69	90	110.5	131	148	162.5	184	221
H6	76	82	80	80	88	93	89	99	71	76	69	80	96	119	127
Ø T mini	26	27.5	49	68	88	112	139	191	241	292	334	388	427	482	578
Ø P	40	50	65	80	100	123	147	198	248	299	340	398	439	495	596

DN	700	750	800	900	1000	1100	1200	1300	1400
E1	680	721	777	850	957	1052	1146	1261	1368
E2	267.5	278	305	335.5	382.5	429	460	475.5	527.5
H6	148	140	170	150	162	175	176	240	228
Ø T mini	683	724	780	853	960	1055	1149	1264	1371
Ø P	700	746	800	874	981	1074	1174	1311	1415

METAL SEAT CONCENTRIC WAFER BUTTERFLY VALVES EXCELLENCE RANGE TTV INCOMPLETE TIGHTNESS STAINLESS STEEL BODY

SIZE (in mm) :

- **Square lever for special key (30x30 mm) :**

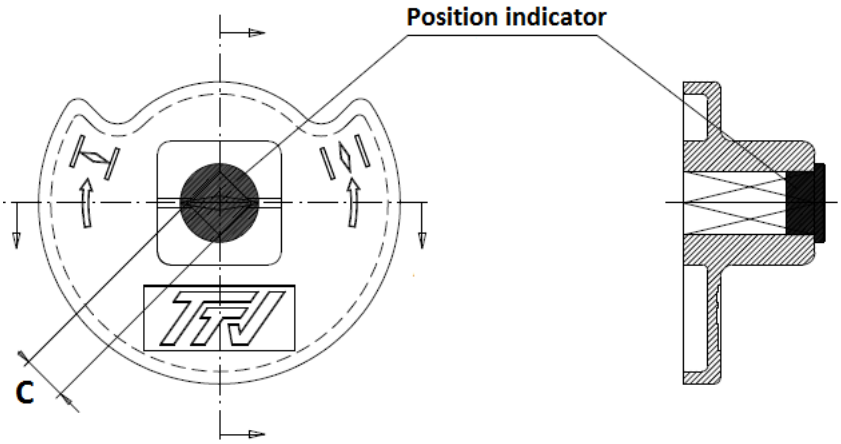

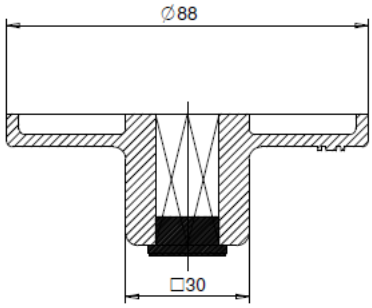

DN	32-50	65	80-100	125-150	200
C	8x8	9x9	11x11	14x14	17x17
Ref.	9866501	9866502	9866503	9866504	9866505

STANDARDS :

- Manufacturer certified ISO 9001:2015
- Designing according to ISO 10631 and EN 593
- DIRECTIVE 2014/68/EU : For liquids or Gas of Group 1
    - DN32-50 : Risk category I, CE marking
    - DN65-200 : Risk category II, CE0094 marking
    - DN250-300 : Risk category III, CE0094 marking
    - DN350 : Risk category II, CE0094 marking
    - DN400-600 : Risk category III, CE0094 marking
- Certificate 3.1 on request
- **Body tests** according to EN 12266-1, Rate A
- Between flanges according to EN 1092-1 PN10/16
- ISO 5211 mounting pad
- Length according to :
    - ISO 5752 short series 20
    - EN 558 series 20 (NF 29305)
    - BS 5155 series 4
    - DIN 3202 part 3, series K1
    - API 609 Table 1 up to DN600
    - ASME B16.10 Table 8 column 3 up to DN350, column 4 from DN400 to 600
- ATEX Group II Category 2 G/2D Zone 1 & 21 Zone 2 &22 **on request**
- The valves are suitable for use in a safety instrumented system up to SIL 2 in low demand mode. Under consideration of the minimum required hardware fault tolerance HFT= 1 the valves may be used in a redundant architecture up to SIL 3.