ADL APPENDAGES

REF. 1117

CARBON STEEL DOUBLE OFFSET LUG BUTTERFLY VALVE CLASS 150 PN20 or PN16

Carbon steel double offset butterfly valve for steam, heating, geothermics, industrial cold, shipbuilding and petrochemical.
Butterfly valve with firesafe certificate ISO 10497 to reduce risks in case of fire.
Graphite packing and PTFE filled with graphite seat for a temperature up to 210°C.
Compatible with explosive atmosphere, ATEX Zone 1&21 and Zone 2&22.
Handling possible with gearbox.
Thanks to the ISO 5211 plate, an actuator can be installed on the valve.

FIRE SAFE | SIL3 | Certificate 3.1 | CE | TÜVRheinland PED/2014/68/UE

Size :	DN50 to DN300 (NPS 2" to 12")
Connection :	Between flanges Class 150 PN20 or PN16
Min Temperature :	-29°C
Max Temperature :	+210°C
Max Pressure :	20 Bars (16 bars for PN16 type)
Specifications :	Lug type ISO 5211 mouting pad Fire safe ISO 10497:2010 ATEX Full crossing stem
Materials :	Carbon steel ASTM A216 WCB

CARBON STEEL DOUBLE OFFSET LUG BUTTERFLY VALVE CLASS 150 PN20 or PN16

SPECIFICATIONS :

- 100% tightness
- Lug type
- Between Class 150 (PN20) flanges or PN16
- Double offset
- Bidirectional with preferential flow direction indicated by the arrow
- Fire safe according to ISO 10497 : 2010
- ISO 5211 mounting pad
- Stainless steel CF8M disc
- Full crossing stem
- 10 positions ductile iron handle, with locking device up to DN150 (NPS 6“)
- Gear box from DN 200 to DN300 (NPS 8" to 12“)
- Inorganic zinc rich primer, gray color, 10 µm thickness
- Finish painting heat resisting aluminum Silver color 1504, 30 µm thickness
- Ductile iron EN GJS-400-15 handle with silver painting color 1504

USE :

- Heating, geothermics, industrial cold, shipbuilding, petrochemical
- Steam : 10 bars maximum
- Min and max Temperature Ts : - 29°C to + 210°C
- Max Pressure Ps : 20 bars (see graph) for CLASS 150 PN20 type and 16 bars for PN16 type
- Vacuum : 10^{-3} torr
- When using at dead end of pipeline, reverse preferential flow direction

RANGE :

- Lug butterfly valve with carbon steel body , and handle **Ref. 1117** DN 50 to DN 150 (NPS 2" to 6“)
- Lug butterfly valve with carbon steel body , and gear box **Ref. 1117** DN 200 to DN 300 (NPS 8" to 12“)
- Gear box **Ref. 1193** from DN 50 to DN 350 (NPS 2" to 14“)

CONNECTION :

- Between Class 150 (PN20) or PN16 flanges

PRESSURE / TEMPERATURE GRAPH :

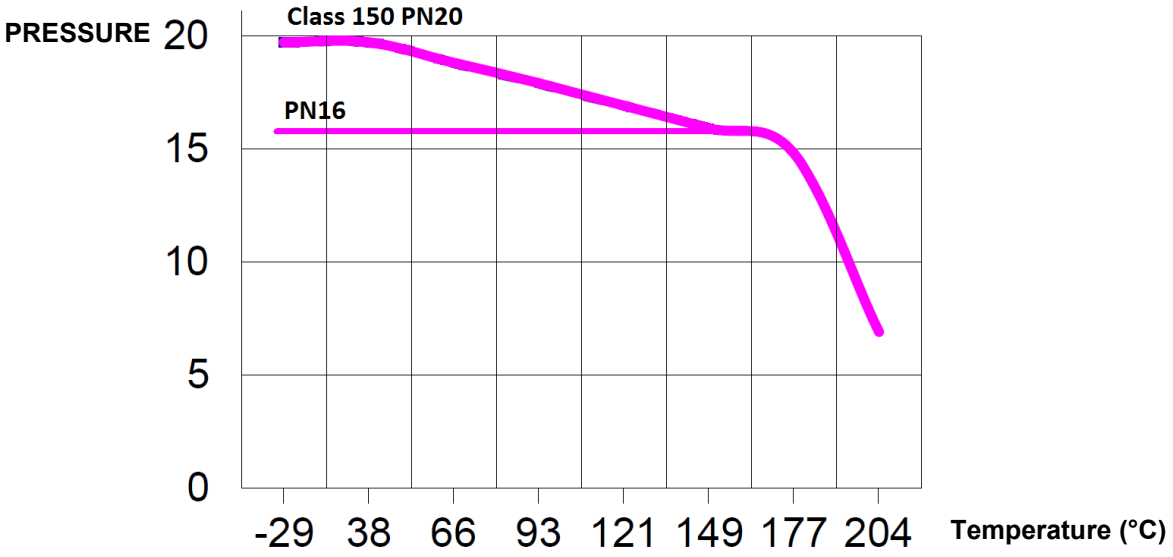

ADL APPENDAGES

REF. 1117

CARBON STEEL DOUBLE OFFSET LUG BUTTERFLY VALVE CLASS 150 PN20 or PN16

TORQUE VALUE (in Nm with safety coefficient of 30 % included) :

DN	50	65	80	100	125	150	200	250	300
NPS	2"	2"1/2	3"	4"	5"	6"	8"	10"	12"
Torque (Nm) at 0 Bar	29	37	50	76	118	147	176	255	333
Torque (Nm) at 5 Bar	32	46	61	88	137	196	235	323	470
Torque (Nm) at 10 Bar	39	61	76	103	170	225	294	421	549
Torque (Nm) at 15 Bar	43	69	92	118	194	265	353	480	686
Torque (Nm) at 20 Bar	49	83	107	140	223	294	421	568	862

MAX TORQUE MAST (in Nm) :

DN	50	65	80	100	125	150	200	250	300
NPS	2"	2"1/2	3"	4"	5"	6"	8"	10"	12"
MAST	163		324		647		906	1295	2589

GEARBOX SPECIFICATIONS :

DN	50-65	80	100	125-150	200-250	300
NPS	2"-2"1/2	3"	4"	5"-6"	8"-10"	12"
Ref.	1193001	1193002	1193003	1193004	-	-
Ratio factor	40 :1	40 :1	36 :1	36 :1	36 :1	52 :1
Number of cycles for opening or closing	10	10	9	9	9	13
Input torque (Nm)	24.5	24.5	54	54	109	150
Output torque (Nm)	245	245	490	490	980	1960

FLOW COEFFICIENT Kv (m3 / h) :

	Percent of Rated Travel									
DN	10%	20%	30%	40%	50%	60%	70%	80%	90%	100%
50	0,9	1,7	4,3	8,6	12,9	19,8	30,2	45,7	55,2	56,9
65	4,3	7,8	19,0	27,6	44,0	60,3	79,3	96,6	117,2	120,7
80	7,8	13,8	35,3	50,9	79,3	110,3	146,6	182,8	220,7	224,1
100	12,1	22,4	56,0	83,6	131,0	181,0	237,9	292,2	353,4	362,1
125	21,6	38,8	97,4	139,7	218,1	301,7	408,6	501,7	600,9	620,7
150	21,6	66,4	131,0	194,8	359,5	627,6	758,6	1013,8	1155,2	1185,3
200	36,2	118,1	233,6	346,6	470,7	659,5	848,3	1123,3	1250,0	1508,6
250	107,8	262,9	424,1	502,6	795,7	1086,2	1422,4	1775,9	2103,4	2299,1
300	146,6	357,8	576,7	831,9	1120,7	1512,9	2637,1	2977,6	3318,1	3763,8

ADL APPENDAGES

REF. 1117

CARBON STEEL DOUBLE OFFSET LUG BUTTERFLY VALVE CLASS 150 PN20 or PN16

MATERIALS VALVES :

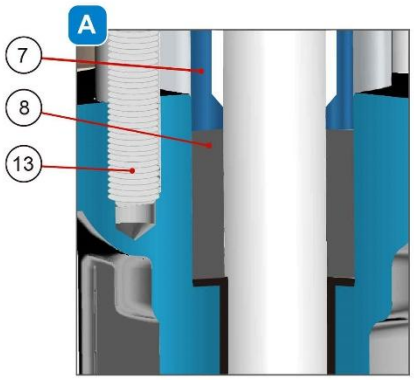

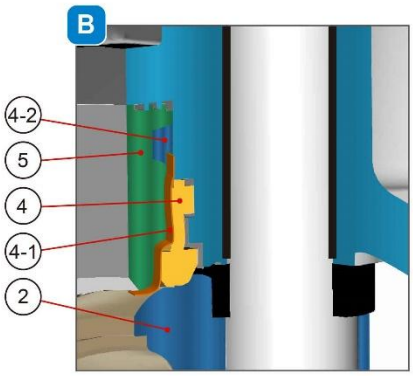

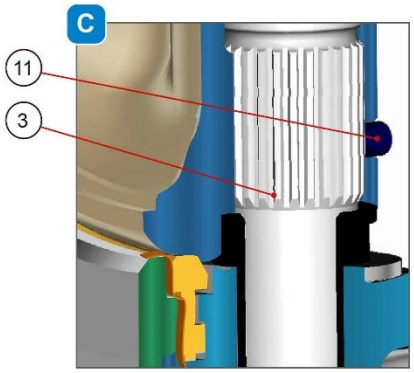

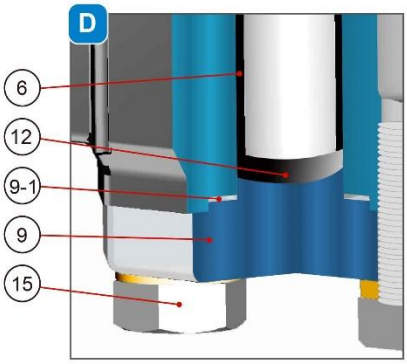

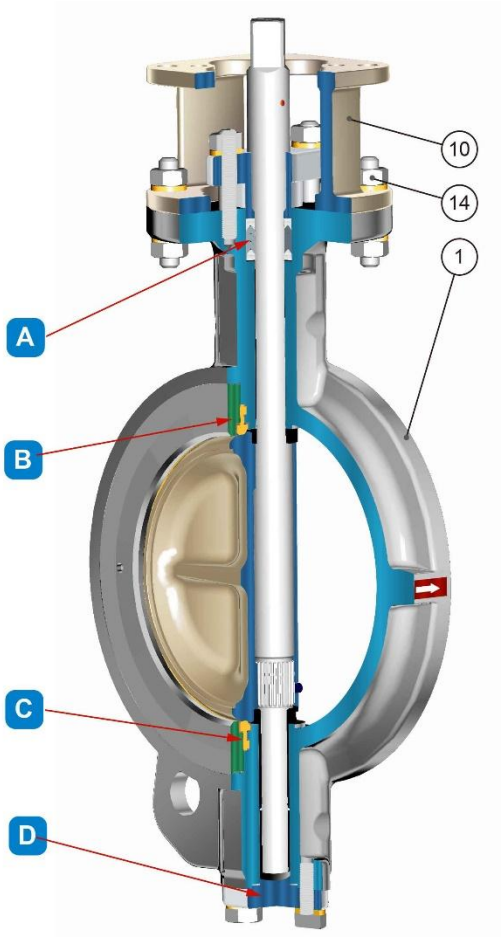

(* : Included in gaskets kit)

Item	Designation	Materials
1	Body	ASTM A216 WCB
2	Disc	ASTM A351 CF8M
3	Shaft	ASTM A564 630
4*	Seat	PTFE filled with 15% graphite
4-1*	Metal seat	Inconel 718
4-2*	Gasket	Graphite
5	Retainer	ASTM A351 CF8
6*	Bushing	RTFE + AISI 316
7	Gland	ASTM A351 CF8
8*	Gland packing	Graphite
9	Bottom cover	ASTM A216 WCB
9-1*	Bottom cover gasket	Graphite
10	Yoke	A536 Gr.65-45-12
11*	Stop stud	ASTM A193 Gr. B8M
12*	Lock plate	RTFE + AISI 316
13	Stud	ASTM A193 Gr. B8
14	Nut	ASTM A194 Gr. 8
15	Bolt	ASTM A193 Gr. B8

Repairability :

*Gaskets Kit (Item 4, 4-1, 4-2, 6, 8, 9-1, 11 and 12)	
DN50	9865290
DN65	9865291
DN80	9865292
DN100	9865293
DN125	9865294
DN150	9865295
DN200	9865296
DN250	9865297
DN300	9865298

CARBON STEEL DOUBLE OFFSET LUG BUTTERFLY VALVE CLASS 150 PN20 or PN16

***MATERIALS GEARBOX DN50 – 300* (NPS 2" to 12") :**

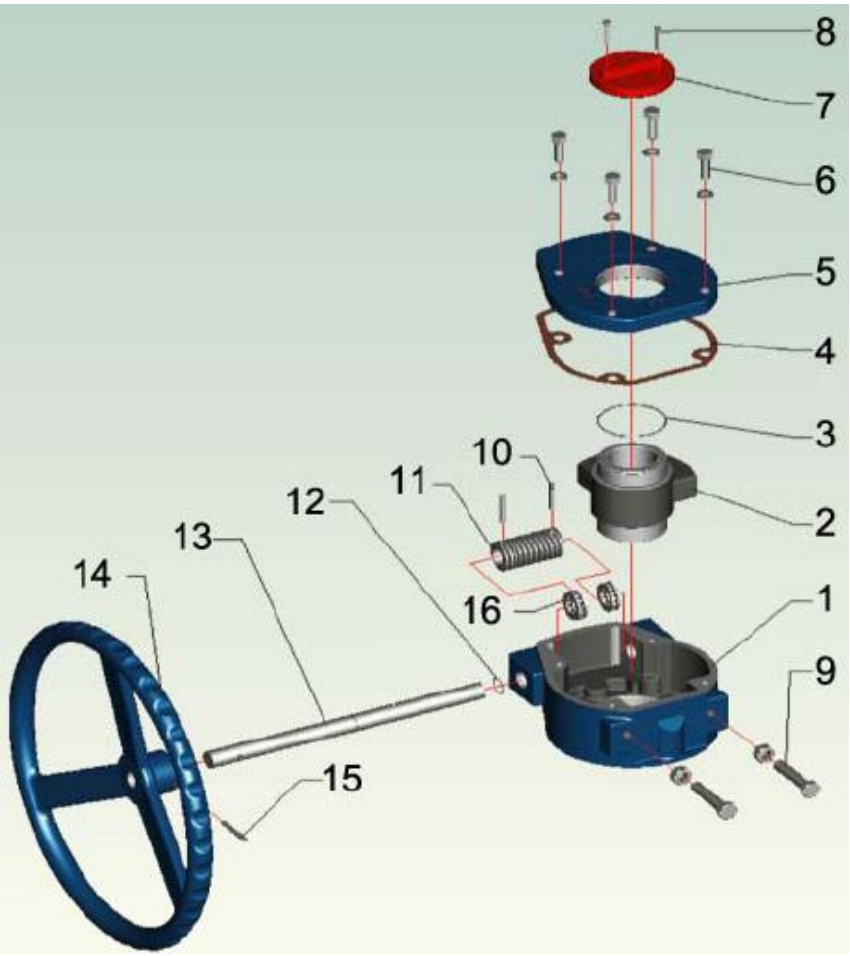

Item	Designation	Materials
1	Body	Cast iron
2	Worm gear	Ductile iron
3	O ring	NBR
4	Gasket	Paper
5	Cover	Cast iron
6	Screw	Steel
7	Indicator	Cast iron
8	Screw	Steel
9	Stop bolt	Steel
10	Pin	Steel
11	Worm	Steel
12	O ring	NBR
13	Worm shaft	Steel
14	Handwheel	Cast iron
15	Pin	Steel
16	Bearing	Steel

ADL APPENDAGES

REF. 1117

CARBON STEEL DOUBLE OFFSET LUG BUTTERFLY VALVE CLASS 150 PN20 or PN16

VALVE SIZE (in mm) :

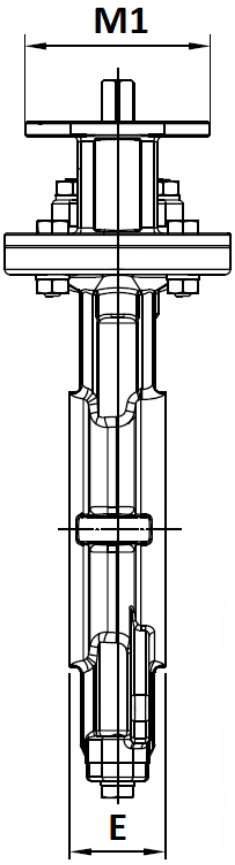

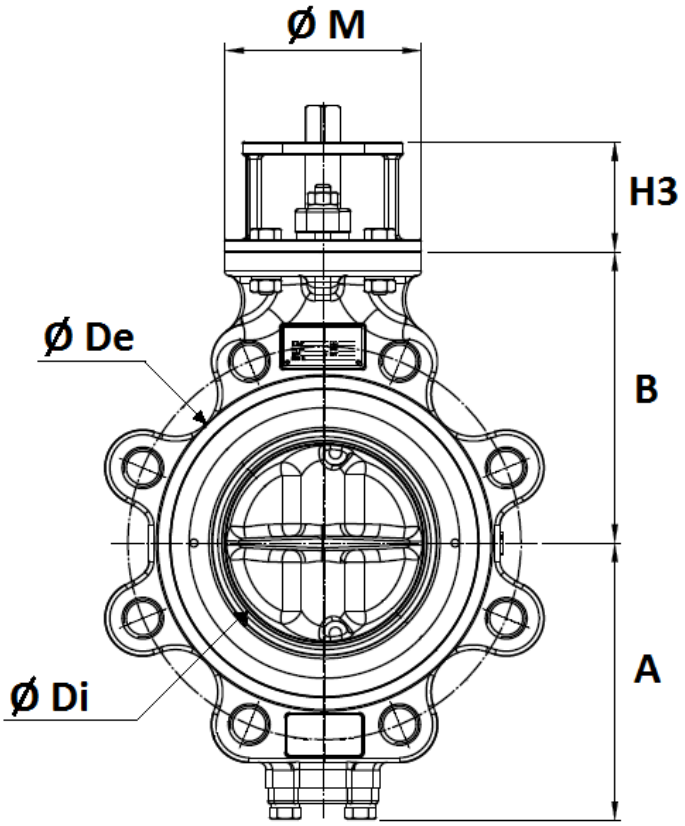

DN	50	65	80	100	125	150	200	250	300
NPS	2"	2"1/2	3"	4"	5"	6"	8"	10"	12"
E	43	46	47	53	57	56	62	68	78
A	99	110	128	150	163	176	206	238	269
B	118	125	140	157	170	185	220	260	290
H3	60	60	70	70	70	70	80	80	100
Ø M	90	90	125	125	125	125	150	150	175
M1	70	70	102	102	102	102	125	125	160
Ø De	92	108	126	153	184	212	268	326	375
Ø Di	38	63	78	95	118	143	188	236	282
Min pipe diameter	49	62	78	93	120	149	196	243	289
Weig. free stem (Kg)	5.1	5.7	11.2	13.8	18.6	21.4	33	48	66

ADL APPENDAGES

REF. 1117

CARBON STEEL DOUBLE OFFSET LUG BUTTERFLY VALVE CLASS 150 PN20 or PN16

HANDLE SIZE :

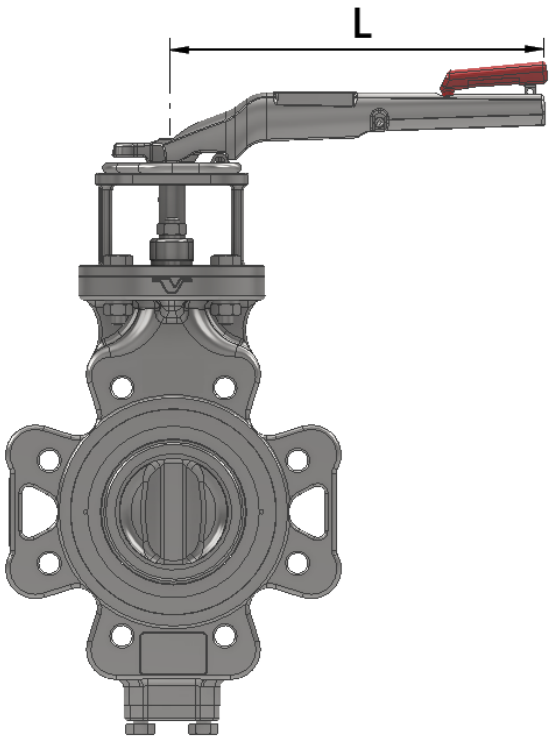

DN	50	65	80	100	125	150
NPS	2"	2"1/2	3"	4"	5"	6"
L	200	200	250	250	355	355
Weight (Kg)	0.7	0.7	0.8	0.8	1.6	1.6

ADL APPENDAGES

REF. 1117

CARBON STEEL DOUBLE OFFSET LUG BUTTERFLY VALVE CLASS 150 PN20 or PN16

GEARBOX SIZE DN 50-300 **(NPS 2" to 12") *:***

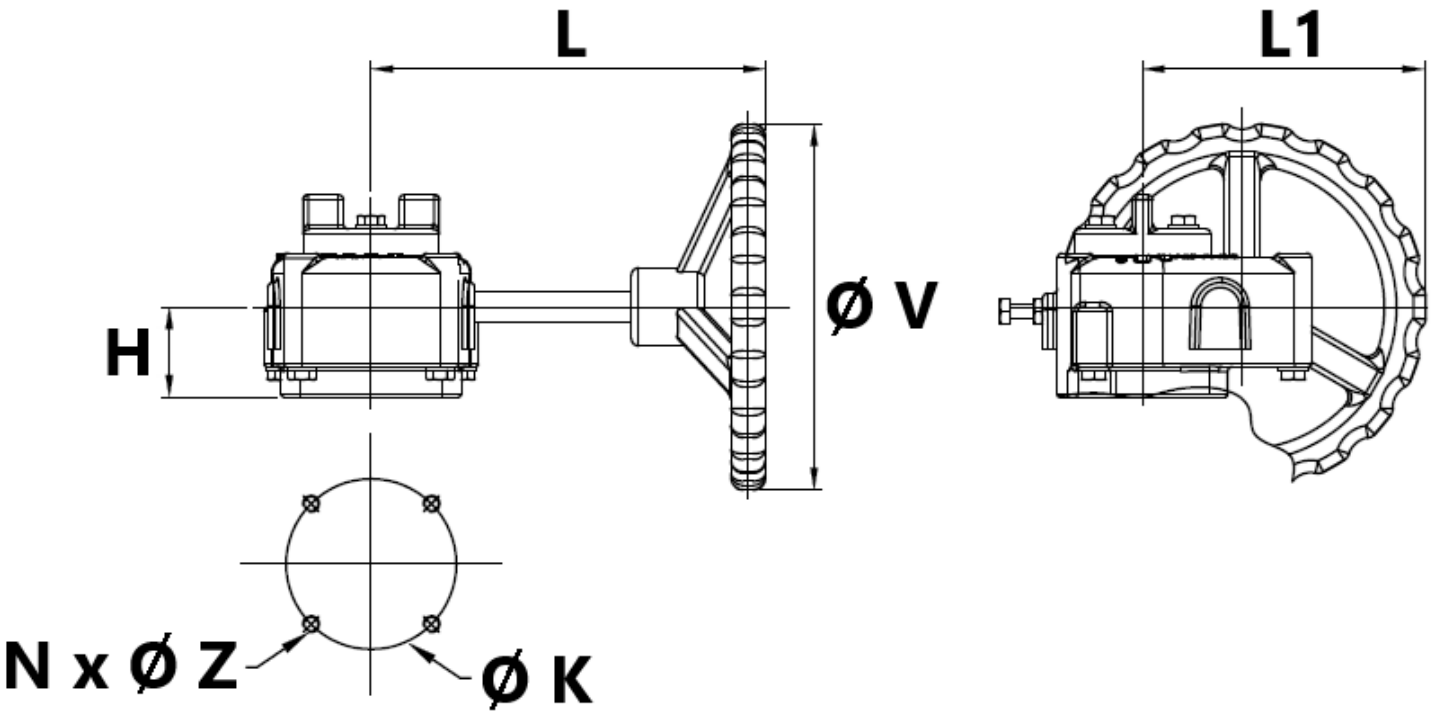

DN	50-65	80	100	125-150	200	250	300
NPS	2"-2"1/2	3"	4"	5"-6"	8"	10"	12"
L	162		202		265		340
L1	116		163		216		281
H	37		42		41		52
Ø V	150		200		310		400
Ø K	70		102		125		140
ISO	F07		F10		F12		F14
N x Ø Z	4 x M8		4 x M10		4 x M12		4 x M16
Weight (Kg)	3.3		7.5		9		22
Ref.	1193001	1193002	1193003	1193004	1193005	1193006	1193007

CARBON STEEL DOUBLE OFFSET LUG BUTTERFLY VALVE CLASS 150 PN20 or PN16

ISO MOUNTIG PAD AND STEM SIZE (in mm) :

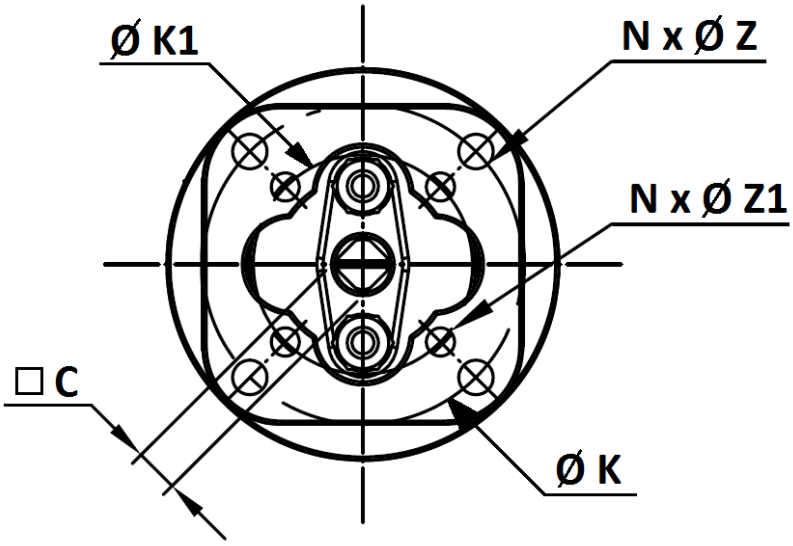

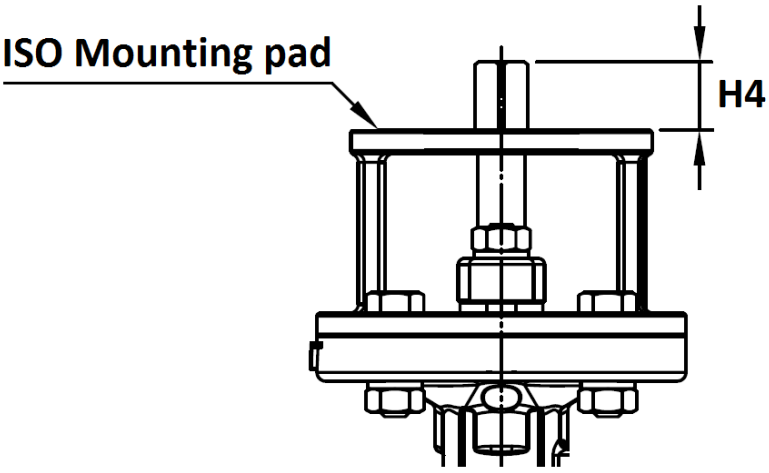

DN	50	65	80	100	125	150	200	250	300
NPS	2"	2"1/2	3"	4"	5"	6"	8"	10"	12"
C	11		14		17		19	22	27
H4	18		23				28		37
Ø K	70		102				125		140
ISO	F07		F10				F12		F14
N x ØZ	4 x 10		4 x 12				4 x 14		4 x 18
Ø K1	50		70				102		125
ISO1	F05		F07				F10		F12
NxØZ1	4 x 8		4 x 10				4 x 12		4 x 14

ADL APPENDAGES

REF. 1117

CARBON STEEL DOUBLE OFFSET LUG BUTTERFLY VALVE CLASS 150 PN20 or PN16

BETWEEN FLANGES PN16 (in mm) :

DN 50 – 65

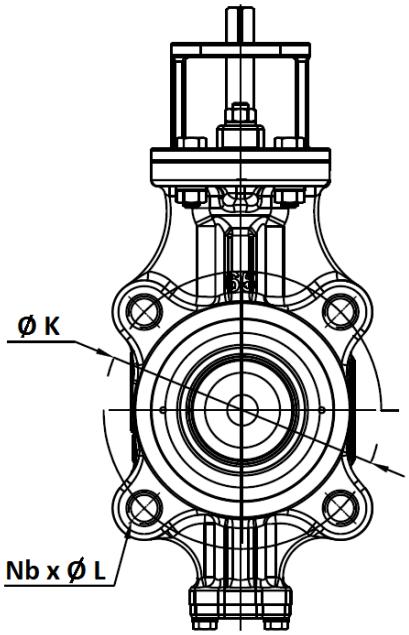

DN 80 - 150

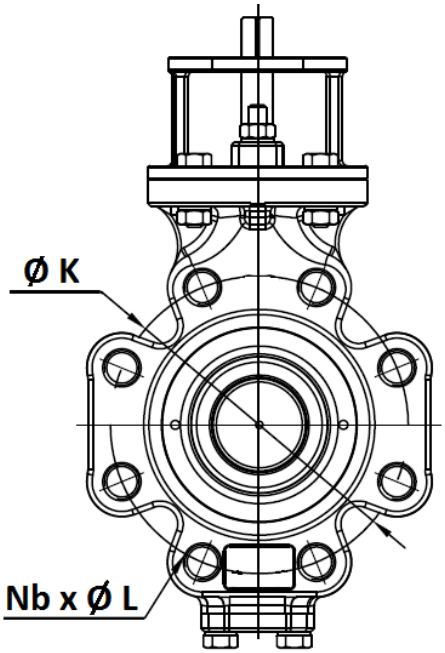

DN 200 - 300

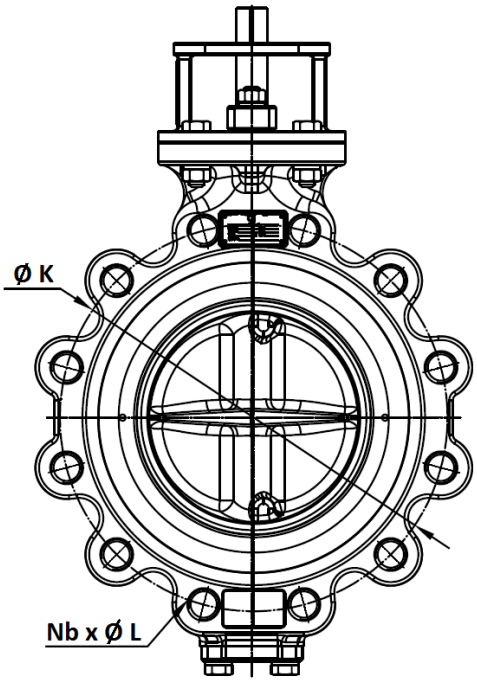

DN	50	65	80	100	125	150	200	250	300
Ø K	125	145	160	180	210	240	295	355	410
Nb x ØL	4 x M16	4 x M16	8 x M16	8 x M16	8 x M16	8 x M20	12 x M20	12 x M24	12 x M24
Ref.	1117050	1117065	1117080	1117100	1117125	1117150	1117200	1117250	1117300

ADL APPENDAGES

REF. 1117

CARBON STEEL DOUBLE OFFSET LUG BUTTERFLY VALVE CLASS 150 PN20 or PN16

BETWEEN FLANGES CLASS 150 PN20 SIZE (in mm) :

NPS 2"– 3"

DN 50 – 80

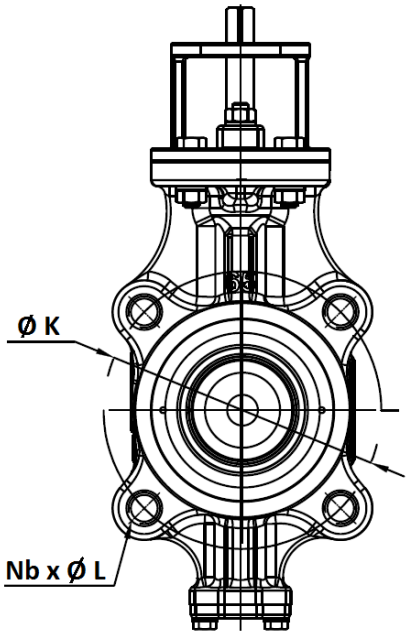

NPS 4" - 8"

DN 100 - 200

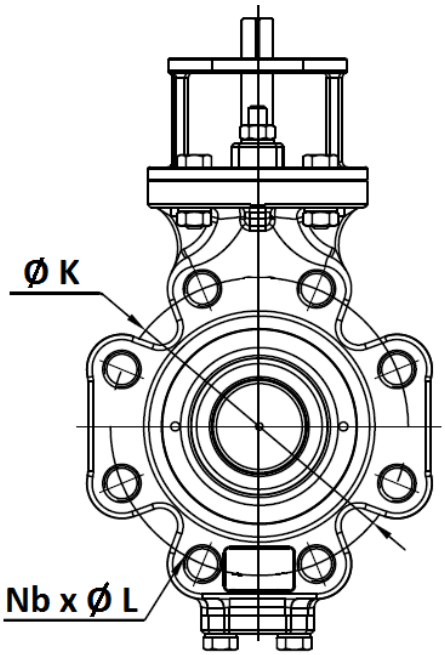

NPS 10" - 12"

DN 250 - 300

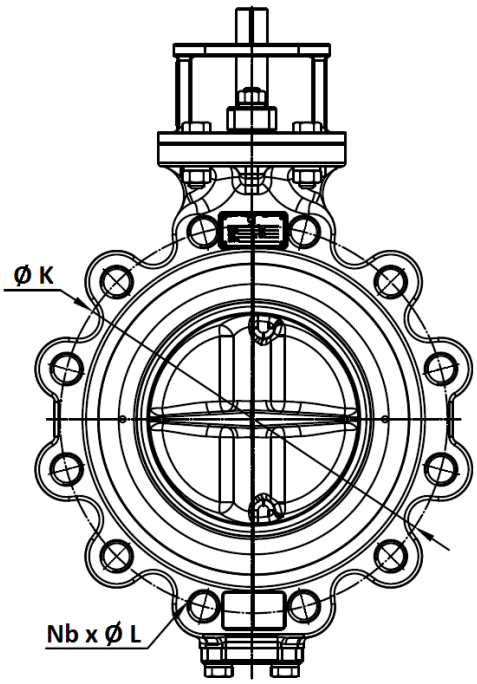

NPS	2"	2"1/2	3"	4"	5"	6"	8"	10"	12"
DN	50	65	80	100	125	150	200	250	300
Ø K	120.6	139.7	152.4	190.5	215.9	241.3	298.4	362	431.8
Nb x ØL (Metric)	4 x M16			8 x M16	8 x M20			12 x M24	
Ref.	1117051	1117066	1117081	1117101	1117126	1117151	1117201	1117251	1117301

CARBON STEEL DOUBLE OFFSET LUG BUTTERFLY VALVE CLASS 150 PN20 or PN16

BOLTING SIZE (in mm, not included with valves) :

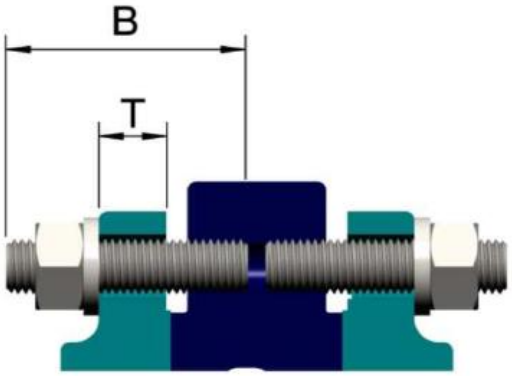

- **PN16 :**

DN	50	65	80	100	125	150	200	250	300
Bolting	M16x2					M20x2.5		M24x3	
B	70		75			85	90	105	
T	20			22		24		26	28

- **CLASS 150 PN20 :**

DN	50	65	80	100	125	150	200	250	300
NPS	2"	2"1/2	3"	4"	5"	6"	8"	10"	12"
Bolting	M16x2				M20x2.5			M24x3	
C	75			80	90		95	100	105
T	20	22	24			25	28	30	32

BOLTING TORQUES :

Bolting size	Max torque (Nm)
M16 (5/8)	150
M20 (3/4)	270
7/8	434
M24	450

CARBON STEEL DOUBLE OFFSET LUG BUTTERFLY VALVE CLASS 150 PN20 or PN16

STANDARDS :

- Manufacturer certified ISO 9001:2015
- DIRECTIVE 2014/68/EU : For liquids and gas of Group 1
    - PN16 types :
        - DN50-65 : Risk Category I, CE0035 marking
        - DN80-200 : Risk Category II, CE0035 marking
        - DN250-300 : Risk Category III, CE0035 marking
    - Class 150 PN20 types :
        - DN50 (NPS 2") : Risk Category I, CE0035 marking
        - DN65-150 (NPS 2"1/2-6") : Risk Category II, CE0035 marking
        - DN200-300 (NPS 8"-12") : Risk Category III, CE0035 marking
- Designing according to API 609
- Marking according to MSS SP-25
- Tightness tests according to ISO 5208, Rate A
- Between flanges according to ANSI B16-5 Class 150 (PN20) or EN 1092-1 PN16
- ISO 5211 mounting pad
- Length according to EN 558 series 20 (ISO 5752 series 20)
- Fire safe according to ISO 10497 : 2010
- ATEX Group II Category 2 G/2D Zone 1 & 21 Zone 2 &22 according to directive 2014/34/EU (Optional marking)
- SIL2 according to IEC/EN 61508, SIL 3 possible according to installation