BRASS BALL VALVE WITH FIXED STEM EXTENSION ACS 4MS (REF.609-618)

PRODUCT EVOLUTION

Be careful, our stem extension valves are changing

We currently have 2 different types available (according to DN) with different height dimensions

Current type :

New type :

At the end, only the new type with packing (from DN1/2" to 2") will be available (from page 2 to 11)

ADL APPENDAGES

REF. 609-618

BRASS BALL VALVE WITH FIXED STEM EXTENSION ACS 4MS (REF.609-618)

4MS brass ball valves with fixed stem extension with full bore for drinking water and water distribution.
PTFE packing and solid ball.
Fixed stem extension to protect the insulation.
Reversible steel handle with Dacromet coated nut.

NEW

Size :	DN3/8" to DN2"
Connection :	Male, Female BSP
Min Temperature :	-10°C
Max Temperature :	+120°C
Max Pressure :	30 Bars (up to DN1")
Specifications :	Fixed stem extension PTFE packing Full bore
Materials :	Brass EN 12165-CW617N-4MS

*the installation defects and wear defects are not covered by the guarantee

BRASS BALL VALVE WITH FIXED STEM EXTENSION ACS 4MS (REF.609-618)

SPECIFICATIONS :

- Full bore
- Large flat sealing face
- Anti blow-out stem (from DN1/2" to DN2")
- Fixed stem extension
- Solid ball
- PTFE packing
- Flat steel or butterfly handle
- Marking body “ 80S “ with ACS, fabrication date and logo
- ACS number on the handle
- Reversible handle (disassemble the stem extension and turn it to 180°)
- Hole on the handle allowing the locking of the valve (thanks to a rilsan clamp)

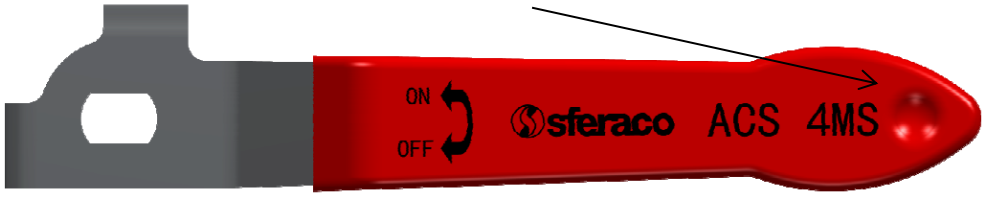

USE :

- Water distribution
- Min Temperature Ts : - 10°C
- Max Temperature Ts :+ 120°C
- Max Pressure Ps : 30 bars up to DN 1“ , 20 bars for DN 1“1/4 and 1“1/2 , 16 bars for DN 2“

RANGE :

- Female / Female with red flat steel handle **Ref. 615** from DN 3/8" to 2"

- Female / Female with blue flat steel handle **Ref. 6151** from DN 1/2" to 2"

- Female / Female with red butterfly handle **Ref. 617** from DN 1/2" to 3/4“

BRASS BALL VALVE WITH FIXED STEM EXTENSION ACS 4MS (REF.609-618)

RANGE (SUITE) :

- Male / Female with red flat steel handle **Ref. 616** from DN 3/8“ to 2“

- Male / Female with blue flat steel handle **Ref. 6161** from DN 1/2" to 2“

- Male / Female with red butterfly handle **Ref. 618** from DN 1/2" to 3/4"

- Male / Male with red flat steel handle **Ref. 609** from DN 1/2" to 1“

BRASS BALL VALVE WITH FIXED STEM EXTENSION ACS 4MS (REF.609-618)

MATERIALS FEMALE – FEMALE TYPES :

REF. 615

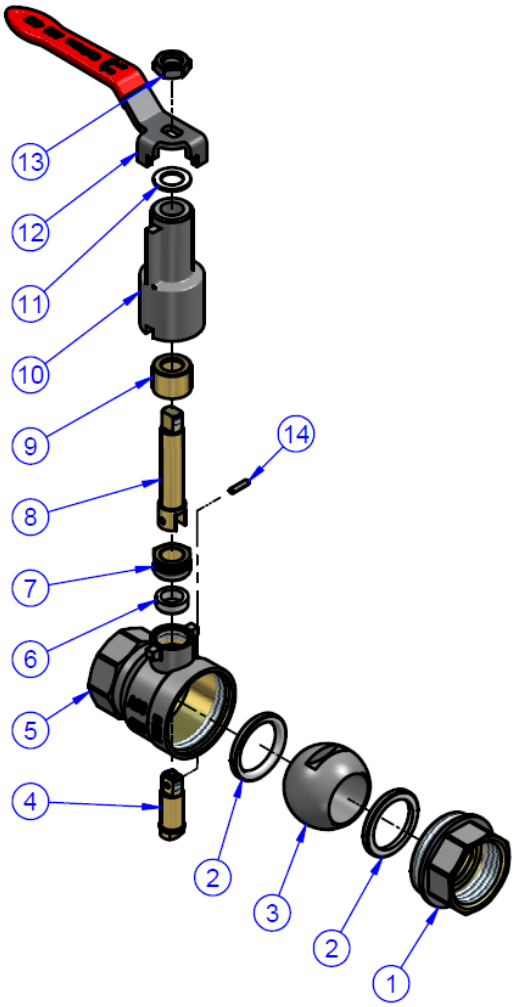

REF.617

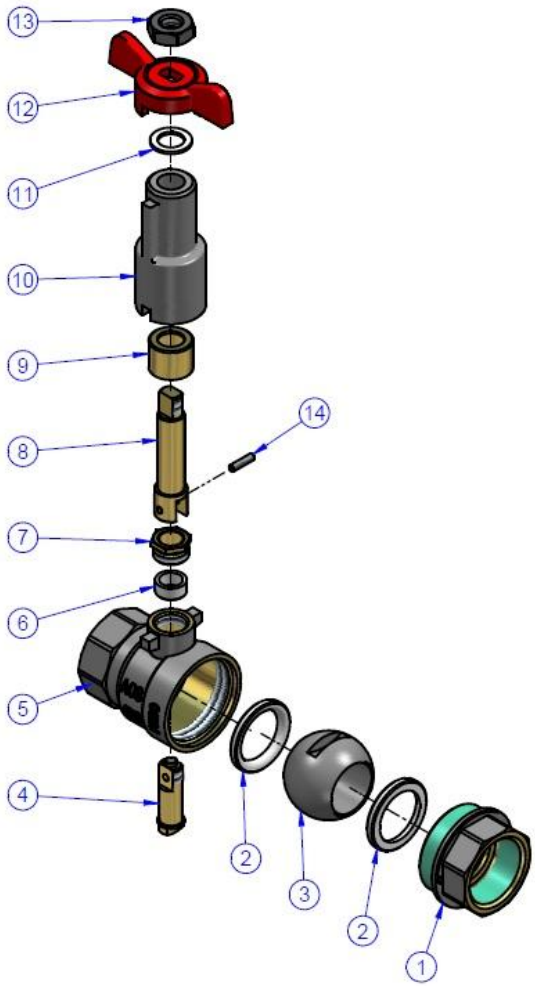

Item	Designation	Materials Ref.615	Materials Ref.617
1	Bonnet	Brass CW 617 N 4MS according to EN 12165 (nickeled external)	
2	Seat	PTFE	
3	Ball	Chromed brass	
4	Stem	Brass CW 617 N 4MS according to EN 12165	
5	Body	Brass CW 617 N 4MS according to EN 12165 (nickeled external)	
6	Packing	PTFE	
7	Packing nut	Brass	
8	Stem extension		
9	Long pole set		
10	Extension housing	AL-46100	
11	Gasket	PTFE	
12	Handle	Steel Q235 with plastic cover	Aluminium
13	Handle nut	Steel Q235 Dacromet coated	
14	Pin	Stainless steel	

BRASS BALL VALVE WITH FIXED STEM EXTENSION ACS 4MS (REF.609-618)

MATERIALS MALE – FEMALE TYPES :

REF. 616

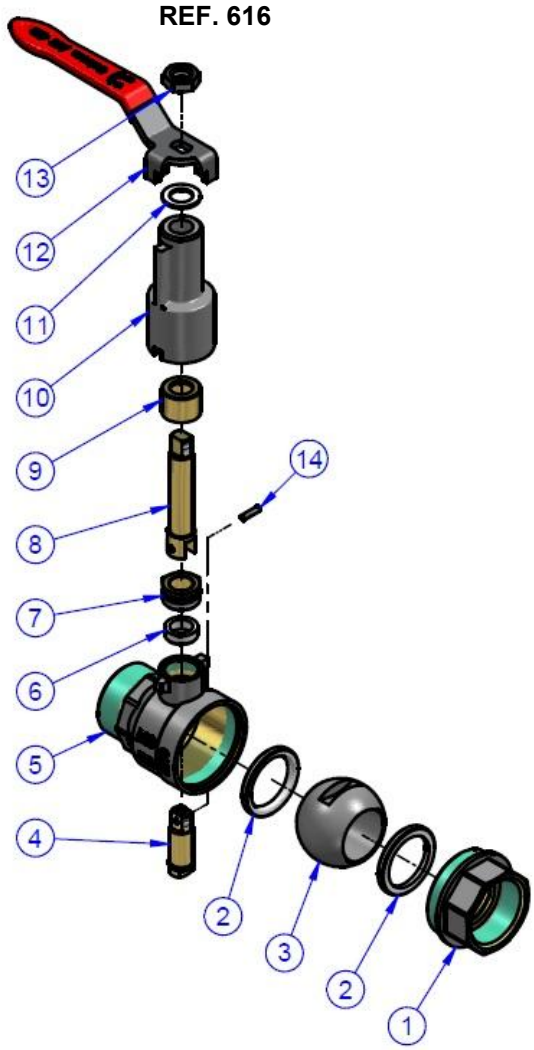

REF.618

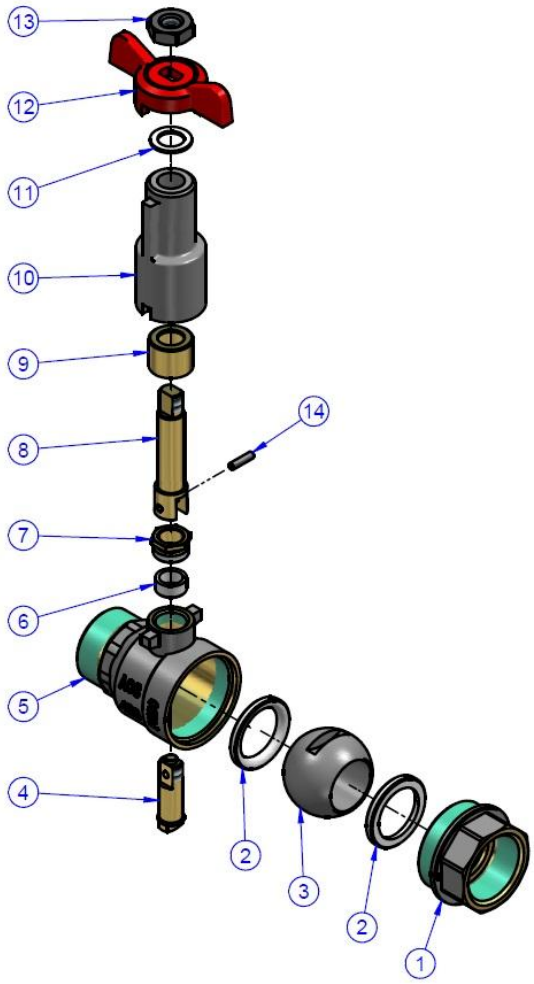

Item	Designation	Materials Ref.616	Materials Ref.618
1	Bonnet	Brass CW 617 N 4MS according to EN 12165 (nickeled external)	
2	Seat	PTFE	
3	Ball	Chromed brass	
4	Stem	Brass CW 617 N 4MS according to EN 12165	
5	Body	Brass CW 617 N 4MS according to EN 12165 (nickeled external)	
6	Packing	PTFE	
7	Packing nut	Brass	
8	Stem extension		
9	Long pole set		
10	Extension housing	AL-46100	
11	Gasket	PTFE	
12	Handle	Steel Q235 with plastic cover	Aluminium
13	Handle nut	Steel Q235 Dacromet coated	
14	Pin	Stainless steel	

BRASS BALL VALVE WITH FIXED STEM EXTENSION ACS 4MS (REF.609-618)

MATERIALS MALE – MALE TYPES :

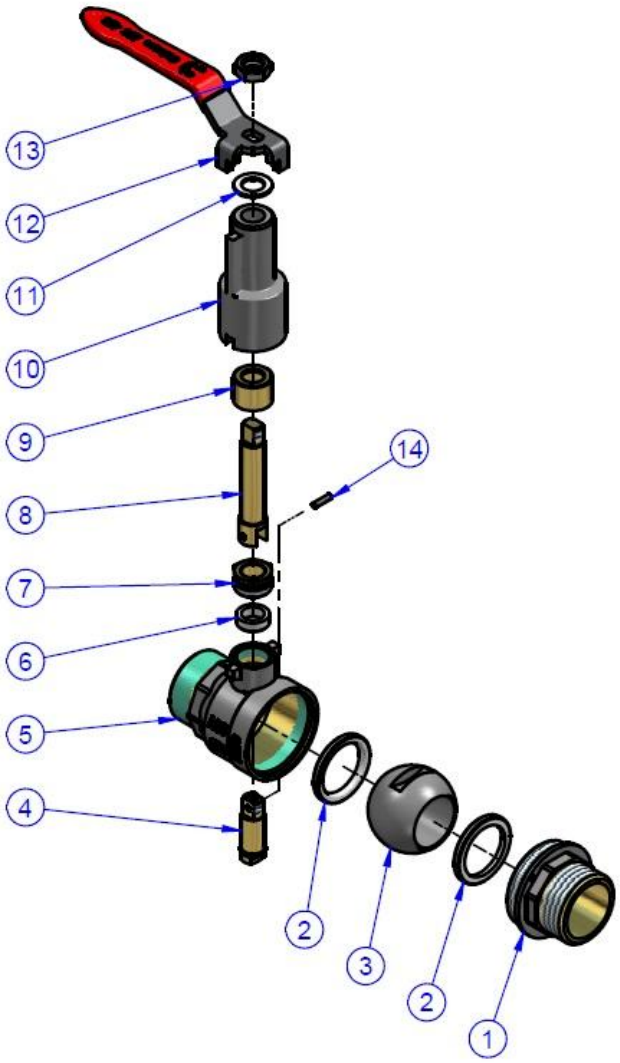

Item	Designation	Materials Ref.609
1	Bonnet	Brass CW 617 N 4MS according to EN 12165 (nickeled external)
2	Seat	PTFE
3	Ball	Chromed brass
4	Stem	Brass CW 617 N 4MS according to EN 12165
5	Body	Brass CW 617 N 4MS according to EN 12165 (nickeled external)
6	Packing	PTFE
7	Packing nut	Brass
8	Stem extension	
9	Long pole set	
10	Extension housing	AL-46100
11	Gasket	PTFE
12	Handle	Steel Q235 with plastic cover
13	Handle nut	Steel Q235 Dacromet coated
14	Pin	Stainless steel

BRASS BALL VALVE WITH FIXED STEM EXTENSION ACS 4MS (REF.609-618)

SIZE TYPES FEMALE / FEMALE (in mm) :

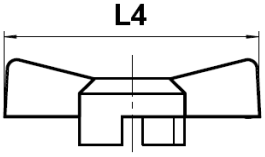

(Type 617)

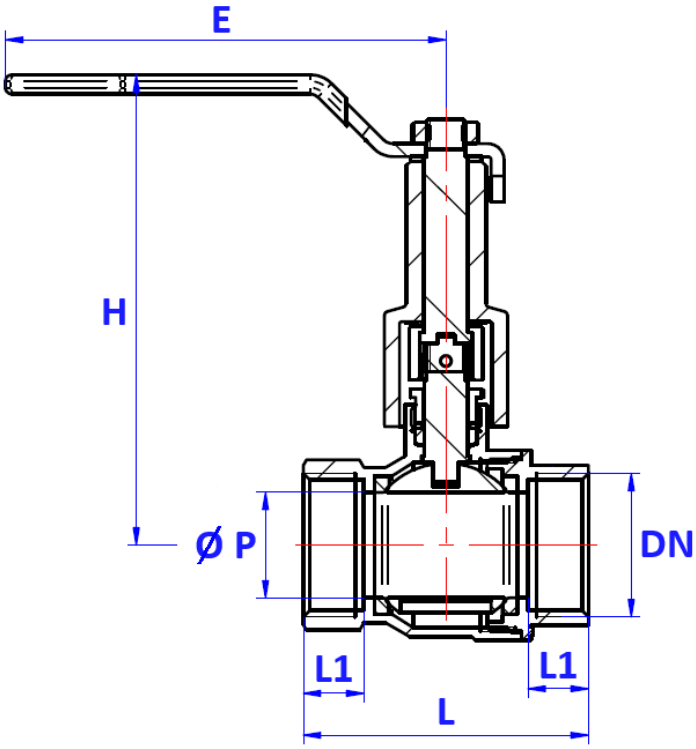

Stem size :

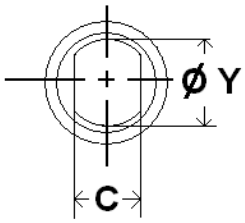

Ref.	DN	3/8"	1/2"	3/4"	1"	1"1/4	1"1/2	2"
615 617	Ø P	10	14.5	19	24.5	31	39.5	49.5
	L	44	49	56	66	76	87	103
	L1	11.5	12	13	14	15	16	18
	L4	-	54		-	-	-	-
	E	81.5		104	102	120		142
	H	83	87	90	109	121	128	143
	C	4.8			5.8	7.8		
	Ø Y	6	8		9	11.5	11.8	13
With handle : Red Ref.615 Blue Ref.6151	Weig. (Kg)	0.18	0.23	0.31	0.48	0.72	0.97	1.56
	Ref.	615003	615004	615005	615006	615007	615008	615009
	Ref.		615104	615105	615106	615107	615108	615109
617 red butterfly handle	Weig. (Kg)	-	0.22	0.28	-	-	-	-
	Ref.		617004	617005				

BRASS BALL VALVE WITH FIXED STEM EXTENSION ACS 4MS (REF.609-618)

SIZE TYPES MALE / FEMALE (in mm) :

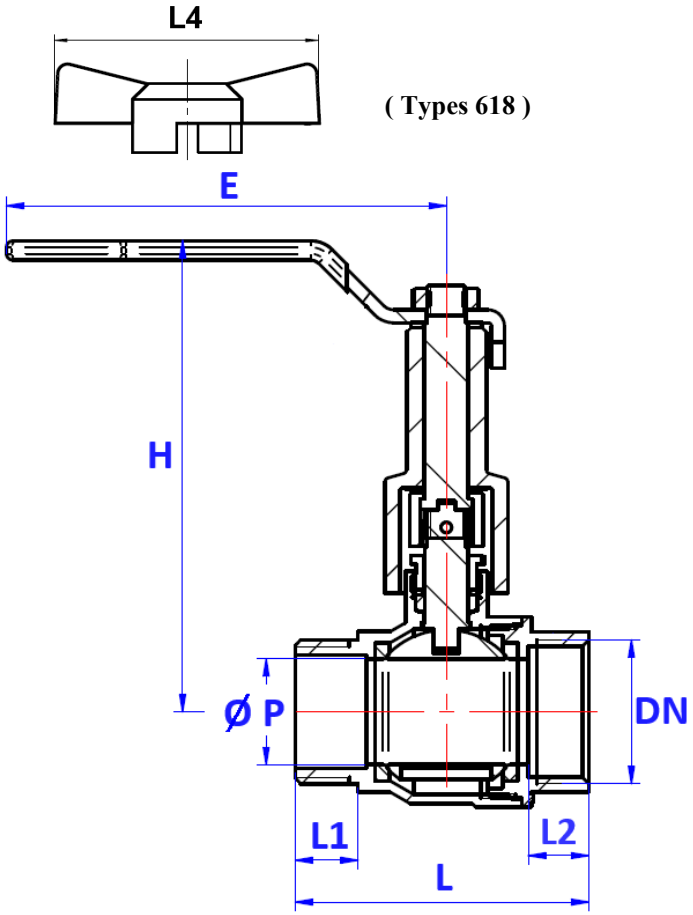

Stem size :

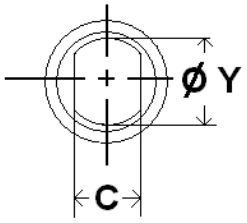

Ref.	DN	3/8"	1/2"	3/4"	1"	1"1/4	1"1/2	2"
616	Ø P	10	14.5	19	24.5	31	39.5	49.5
	L	45	52	60.5	68	81.5	95.5	112.5
	L1	10	10	12	14.5	15.5	16	18
	L2	11.5	12	13	14	15	16	18
618	L4	-	54		-	-	-	-
	E	81.5	81.5	104	102	120	120	142
	H	83	87	90	109	121	128	143
	C	4.8	4.8	4.8	5.8	7.8	7.8	7.8
	Ø Y	6	8	8	9	11.5	11.8	13
With handle :	Weig. (in Kg)	0.18	0.24	0.32	0.48	0.75	1	1.61
Red Ref.616	Ref.	616003	616004	616005	616006	616007	616008	616009
Blue Ref.6161	Ref.	-	616104	616105	616106	616107	616108	616109
618 red butterfly handle	Weig. (in Kg)	-	0.22	0.29	-	-	-	-
	Ref.		618004	618005				

BRASS BALL VALVE WITH FIXED STEM EXTENSION ACS 4MS (REF.609-618)

SIZE TYPES MALE / MALE (in mm) :

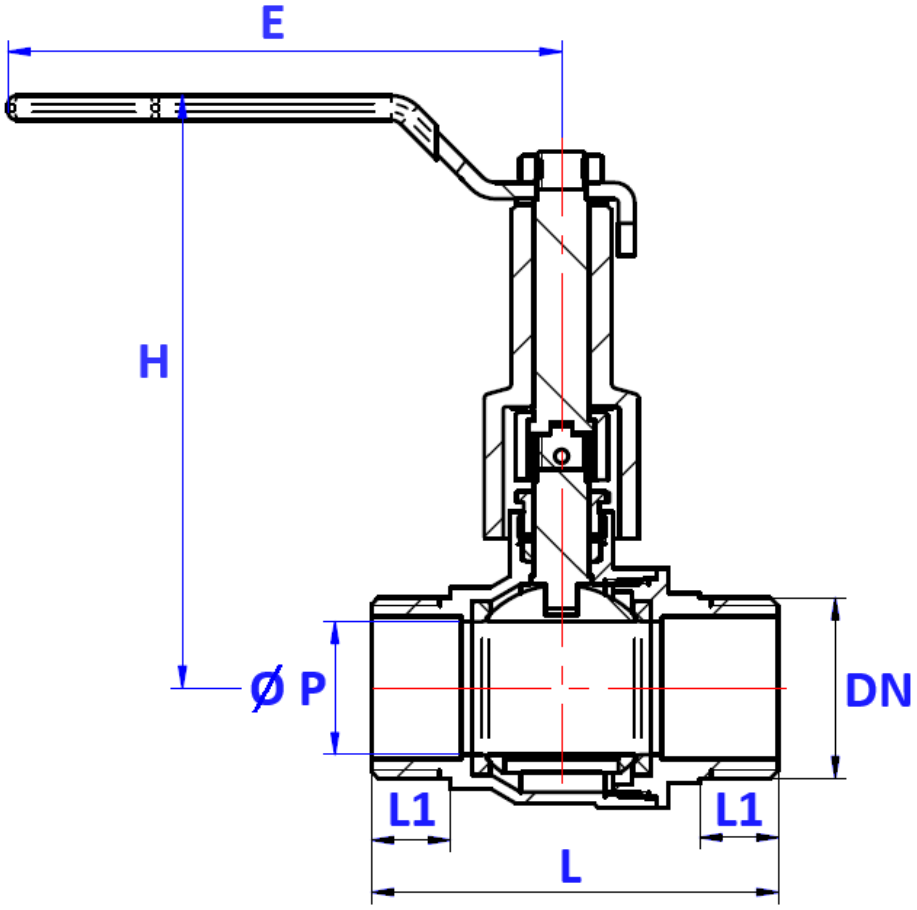

Stem size :

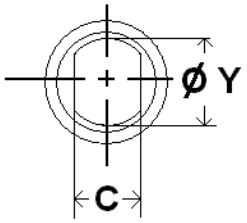

DN	1/2"	3/4"	1"
Ø P	14.5	19	24.5
L	57	66.5	75
L1	10	12	14.5
E	81.5	104	102
H	87	90	109
C	4.8	4.8	5.8
Ø Y	8	8	9
Weight (in Kg)	0.25	0.33	0.5
Ref.	609004	609005	609006

BRASS BALL VALVE WITH FIXED STEM EXTENSION ACS 4MS (REF.609-618)

STANDARDS :

- Manufacturer certified ISO 9001 : 2015 and ISO 14001 : 2015
- DIRECTIVE 2014/68/EU : Products excluded from directive (Article 1, § 2b)
- French water agreement **A.C.S. N° 24 ACC LY 629**
- Threaded male and female BSP cylindrical ends according to ISO 228-1

ADL APPENDAGES

REF. 609-618

BRASS BALL VALVE WITH FIXED STEM EXTENSION ACS 4MS (REF.609-618)

4MS brass ball valves with fixed stem extension with full bore for drinking water and water distribution.
PTFE packing and solid ball.
Fixed stem extension to protect the insulation.
Reversible steel handle with Dacromet coated nut.

Size :	DN3/8" to DN2"
Connection :	Male, Female BSP
Min Temperature :	-10°C
Max Temperature :	+120°C
Max Pressure :	30 Bars (up to DN1")
Specifications :	Fixed stem extension PTFE packing Full bore
Materials :	Brass EN 12165-CW617N-4MS

BRASS BALL VALVE WITH FIXED STEM EXTENSION ACS 4MS (REF.609-618)

SPECIFICATIONS :

- Full bore
- Large flat sealing face
- Fixed stem extension
- Solid ball
- PTFE packing
- Flat steel or butterfly handle
- Marking body “ 80S “ with ACS, fabrication date and logo
- ACS number on the handle
- Reversible handle
- Hole on the handle allowing the locking of the valve (thanks to a rilsan clamp)

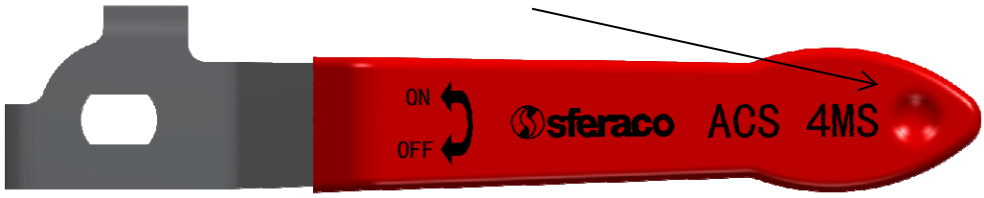

USE :

- Water distribution
- Min Temperature Ts : - 10°C
- Max Temperature Ts :+ 120°C
- Max Pressure Ps : 30 bars up to DN 1“ , 20 bars for DN 1“1/4 and 1“1/2 , 16 bars for DN 2“

RANGE :

- Female / Female with red flat steel handle **Ref. 615** from DN 3/8" to 2"

- Female / Female with blue flat steel handle **Ref. 6151** from DN 1/2" to 2"

- Female / Female with red butterfly handle **Ref. 617** from DN 1/2" to 3/4“

BRASS BALL VALVE WITH FIXED STEM EXTENSION ACS 4MS (REF.609-618)

RANGE (SUITE) :

- Male / Female with red flat steel handle **Ref. 616** from DN 3/8“ to 2“

- Male / Female with blue flat steel handle **Ref. 6161** from DN 1/2" to 2“

- Male / Female with red butterfly handle **Ref. 618** from DN 1/2" to 3/4"

- Male / Male with red flat steel handle **Ref. 609** from DN 1/2" to 1“

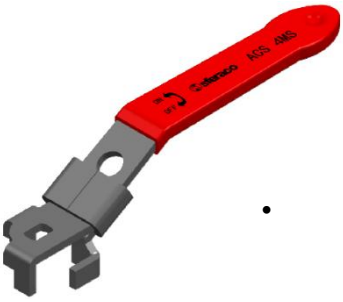

- Lockable handle **Ref.9812155-9812159** from DN1/2" to DN2"

BRASS BALL VALVE WITH FIXED STEM EXTENSION ACS 4MS (REF.609-618)

MATERIALS FEMALE – FEMALE TYPES :

REF. 615

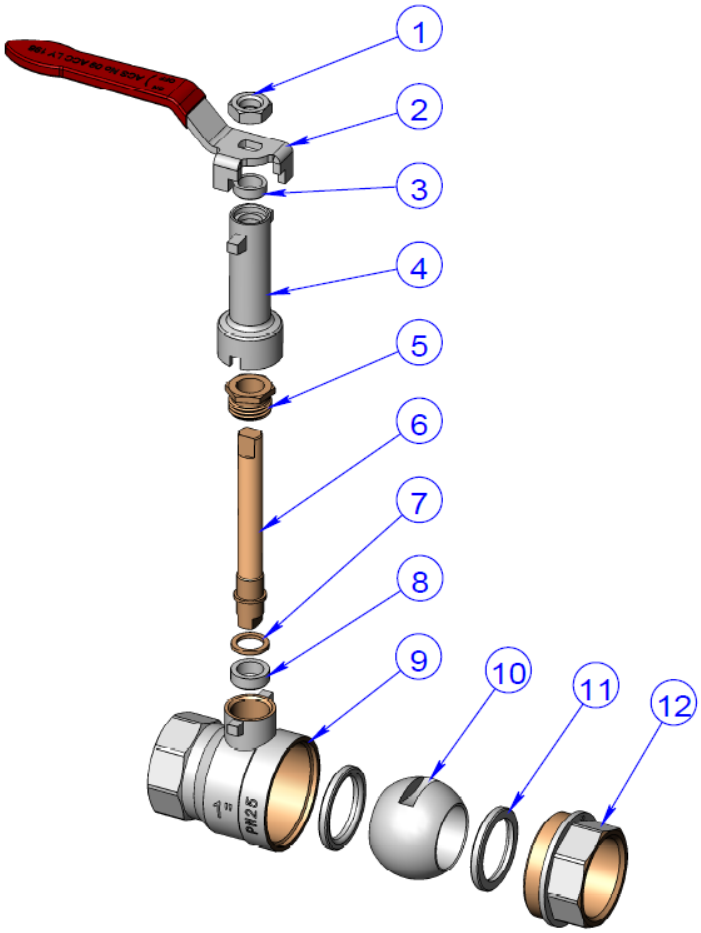

REF.617

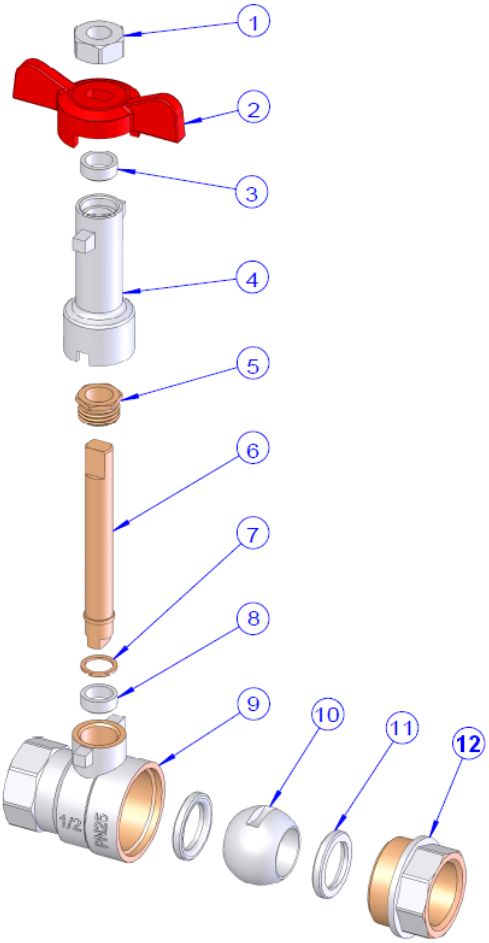

Item	Designation	Materials Ref.615	Materials Ref.617
1	Handle nut	Steel Q235 Dracomet coated	
2	Handle	Steel Q235 with plastic cover	Aluminium
3	Ring	PTFE	
4	Stem extension	Nickeled brass	
5	Packing nut	Brass	
6	Stem		
7	Ring		
8	Packing	PTFE	
9	Body (external)	Nickeled brass CW 617 N 4MS according to EN 12165	
9	Body (internal)	Brass CW 617 N 4MS according to EN 12165	
10	Ball	Chromed brass	
11	Seat	PTFE	
12	Bonnet (external)	Nickeled brass CW 617 N 4MS according to EN 12165	
12	Bonnet (internal)	Brass CW 617 N 4MS according to EN 12165	

BRASS BALL VALVE WITH FIXED STEM EXTENSION ACS 4MS (REF.609-618)

MATERIALS MALE – FEMALE TYPES :

REF. 616

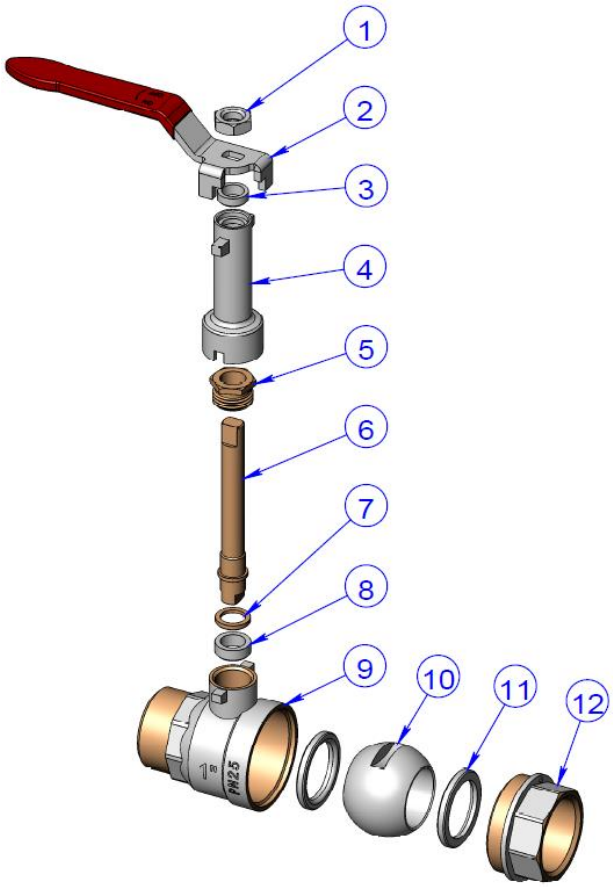

REF.618

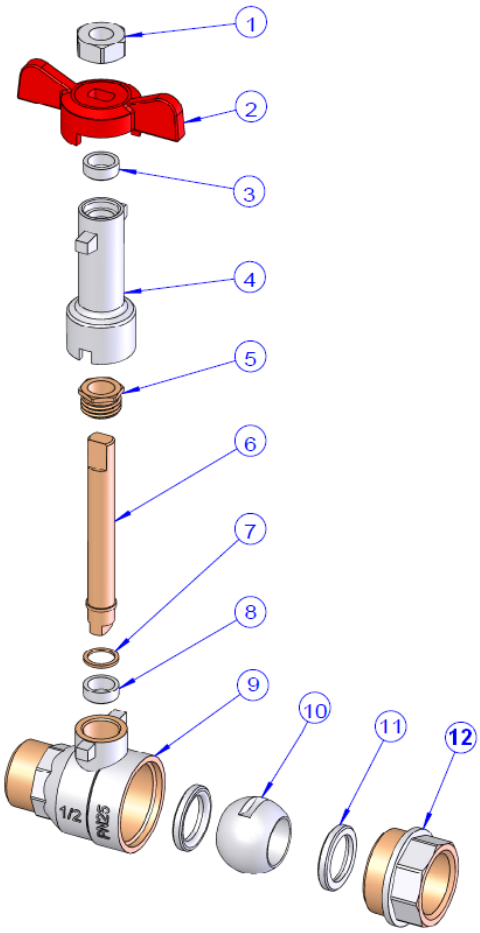

Item	Designation	Materials Ref.616	Materials Ref.618
1	Handle nut	Steel Q235 Dacromet coated	
2	Handle	Steel Q235 with plastic cover	Aluminium
3	Ring	PTFE	
4	Stem extension	Nickeled brass	
5	Packing nut	Brass	
6	Stem		
7	Ring		
8	Packing	PTFE	
9	Body (external)	Nickeled brass CW 617 N 4MS according to EN 12165	
9	Body (internal)	Brass CW 617 N 4MS according to EN 12165	
10	Ball	Chromed brass	
11	Seat	PTFE	
12	Bonnet (external)	Nickeled brass CW 617 N 4MS according to EN 12165	
12	Bonnet (internal)	Brass CW 617 N 4MS according to EN 12165	

BRASS BALL VALVE WITH FIXED STEM EXTENSION ACS 4MS (REF.609-618)

MATERIALS MALE – MALE TYPES :

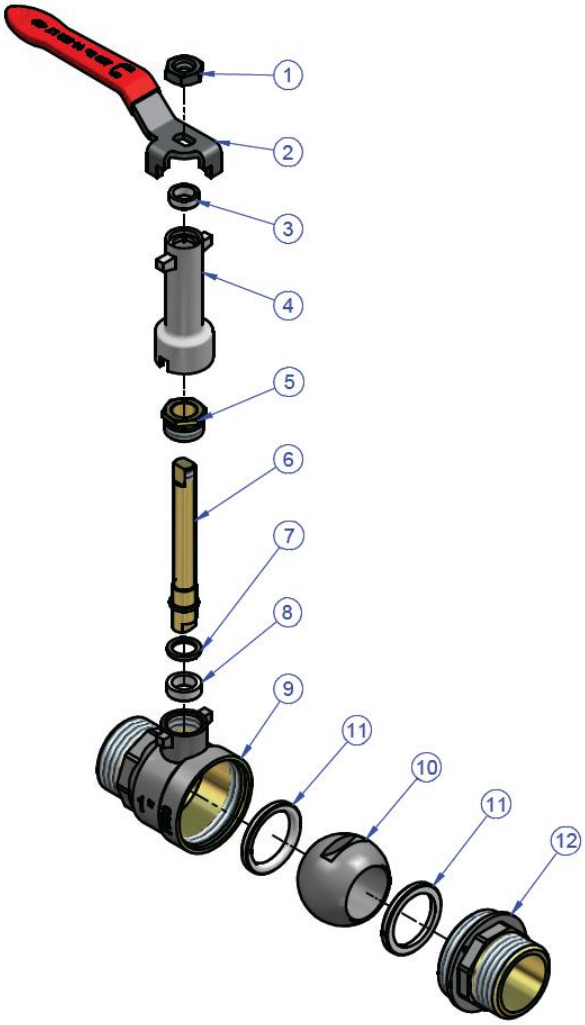

Item	Designation	Materials Ref.609
1	Handle nut	Steel Q235 Dacromet coated
2	Handle	Steel Q235 with plastic cover
3	Ring	PTFE
4	Stem extension	Nickeled brass
5	Packing nut	Brass
6	Stem	
7	Ring	
8	Packing	PTFE
9	Body (external)	Nickeled brass CW 617 N 4MS according to EN 12165
9	Body (internal)	Brass CW 617 N 4MS according to EN 12165
10	Ball	Chromed brass
11	Seat	PTFE
12	Bonnet (external)	Nickeled brass CW 617 N 4MS according to EN 12165
12	Bonnet (internal)	Brass CW 617 N 4MS according to EN 12165

ADL APPENDAGES

REF. 609-618

BRASS BALL VALVE WITH FIXED STEM EXTENSION ACS 4MS (REF.609-618)

SIZE FEMALE / FEMALE TYPES (in mm) :

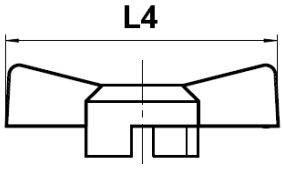

(Ref. 617)

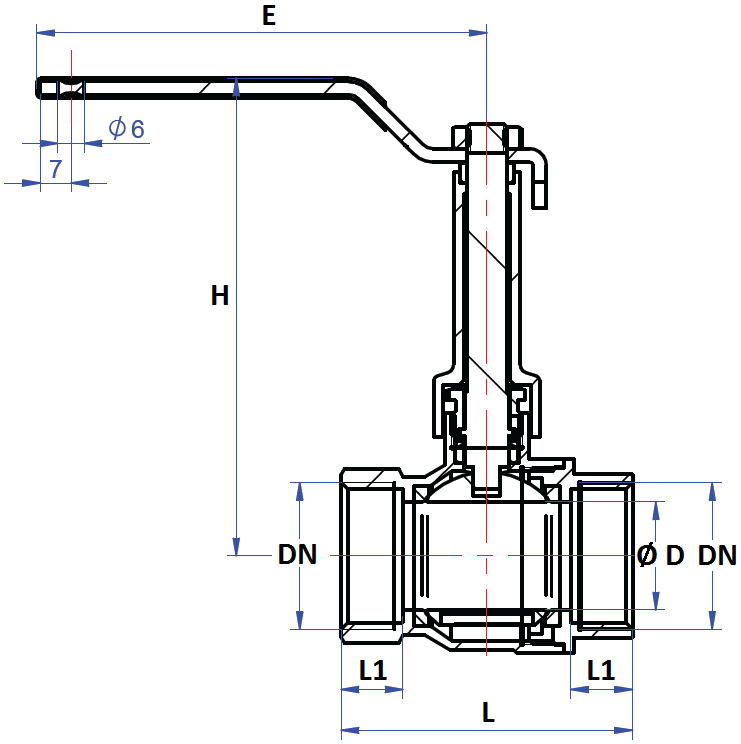

Stem size :

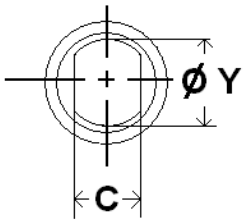

Ref.	DN	3/8"	1/2"	3/4"	1"	1"1/4	1"1/2	2"
615 617	Ø D	10	14.5	19	24.5	31	39.5	49.5
	L	44	49	56	66	76	87	103
	L1	11.5	12	13	14	15	16	18
	L4	-	52	52	-	-	-	-
	E	81.5	81.5	104	102	120	120	142
	H	83.7	84.4	88.4	107.5	127.8	134	146
	C	4.8	4.8	4.8	5.8	7.8	7.8	7.8
	Ø Y	6	8	8	9	11.5	11.8	13
With lever : Red Ref.615 Blue Ref.6151	Weig. (Kg)	0.15	0.23	0.31	0.43	0.73	0.98	1.53
	Ref.	615003	615004	615005	615006	615007	615008	615009
	Ref.		615104	615105	615106	615107	615108	615109
617 red butterfly handle	Weig. (Kg)	-	0.21	0.28	-	-	-	-
	Ref.		617004	617005				

BRASS BALL VALVE WITH FIXED STEM EXTENSION ACS 4MS (REF.609-618)

SIZE MALE / FEMALE TYPES (in mm) :

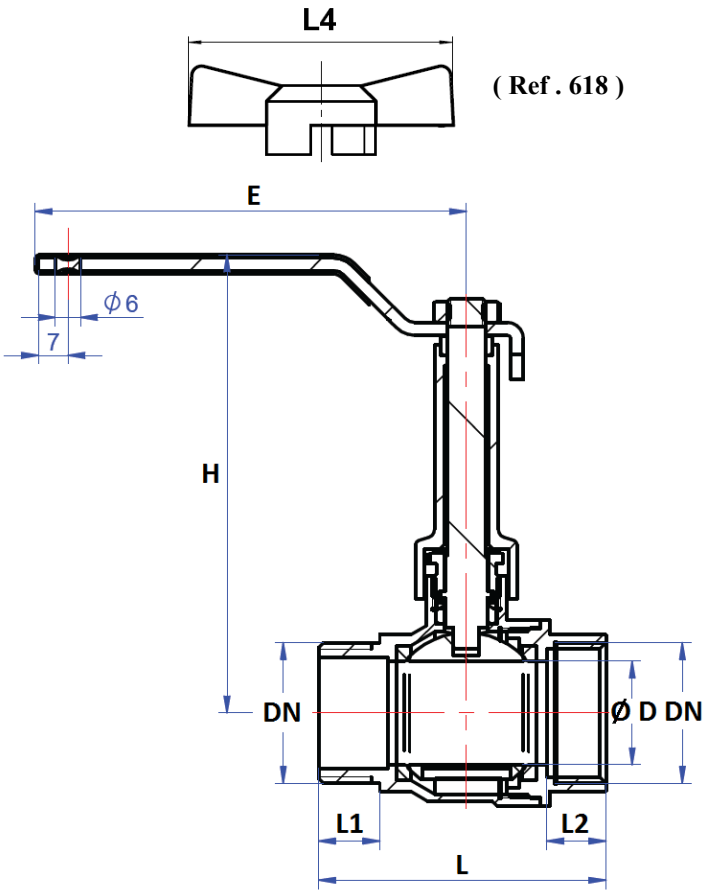

Stem size :

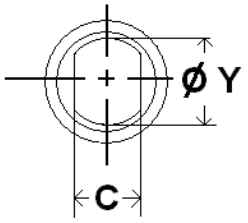

Ref.	DN	3/8"	1/2"	3/4"	1"	1"1/4	1"1/2	2"
616	Ø D	10	14.5	19	24.5	31	39.5	49.5
	L	45	52	60.5	68	81.5	95.5	112.5
	L1	11.5	12	13	14	15	16	18
	L2	10	10	12	14.5	15.5	16	18
618	L4	-	52	52	-	-	-	-
	E	81.5	81.5	104	102	120	120	142
	H	83.7	84.4	88.4	107.5	127.8	134	146
	C	4.8	4.8	4.8	5.8	7.8	7.8	7.8
	Ø Y	6	8	8	9	11.5	11.8	13
With lever :	Weig. (Kg)	0.18	0.24	0.32	0.46	0.75	1	1.58
Red Ref.616	Ref.	616003	616004	616005	616006	616007	616008	616009
Blue Ref.6161	Ref.	-	616104	616105	616106	616107	616108	616109
618 red butterfly handle	Weig. (Kg)	-	0.22	0.29	-	-	-	-
	Ref.		618004	618005				

BRASS BALL VALVE WITH FIXED STEM EXTENSION ACS 4MS (REF.609-618)

SIZE MALE / MALE TYPES (in mm) :

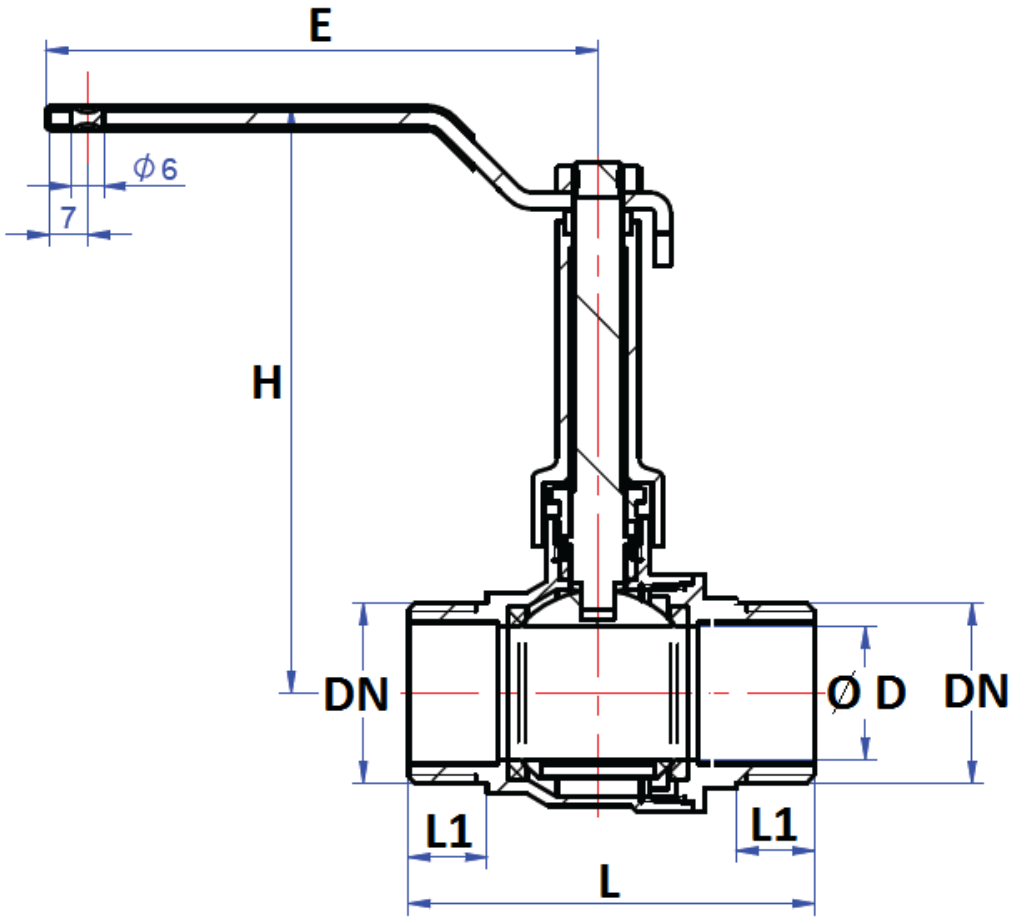

Stem size :

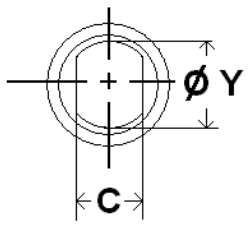

DN	1/2"	3/4"	1"
Ø D	14.5	19	24.5
L	57	66.5	75
L1	10	12	14.5
E	81.5	104	102
H	84.4	88.4	107.5
C	4.8	4.8	5.8
Ø Y	8	8	9
Weight (in Kg)	0.25	0.33	0.48
Ref.	609004	609005	609006

BRASS BALL VALVE WITH FIXED STEM EXTENSION ACS 4MS (REF.609-618)

STANDARDS :

- Manufacturer certified ISO 9001 : 2015 and ISO 14001 : 2015
- DIRECTIVE 2014/68/EU : Products excluded from directive (Article 1, § 2b)
- French water agreement **A.C.S. N° 19 ACC LY 649**
- Threaded male and female BSP cylindrical ends according to ISO 228-1