Communication and power supply unit for Top-Line fire protection actuators in the BELIMO MP-Bus network.

- **AC 230 V supply via Euro plug**
- **Supply and control are electrically isolated**
- **Simple integration of a smoke detector contact possible**
- **Suitable actuators**
  Top-Line fire protection actuators
  BF(G)24TL-T-ST

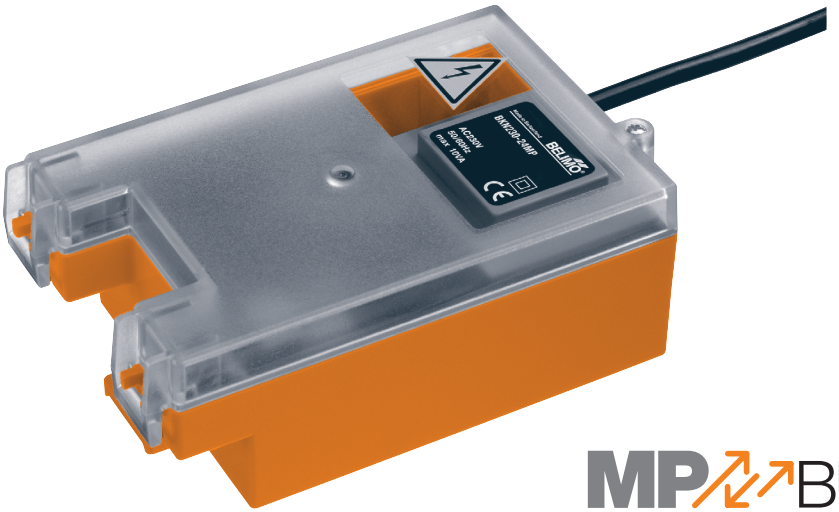

Technical data

Electrical data	Nominal voltage	AC 230 V, 50/60 Hz
	Nominal voltage range	AC 198 ... 264 V
	Power consumption Operation For wire sizing	8 W (incl. actuator) 10 VA (incl. actuator)
	Connections	see «Connections» on page 2
Safety	Protection class	**II** Totally insulated ⧈
	Degree of protection	IP40
	EMC Low-voltage directive	CE according to 2004/108/EC CE according to 2006/95/EC
	Mode of operation	Type 1 (EN 60730-1)
	International certificate	CB in accordance with IEC 60730-1/-2-14
	Rated impulse voltage	4 kV (EN 60730-1)
	Control pollution degree	2 (EN 60730-1)
	Ambient temperature	–30° ... +50°C
	Non-operating temperature	–40° ... +80°C
	Moisture test	95% r.h., non-condensating (EN 60730-1)
	Maintenance	Maintenance-free
Dimensions / Weight	Dimensions	See «Dimensions» on page 3
	Weight	Approx. 550 g

Safety notes

- **The device has been designed for use in stationary heating, ventilation and air-conditioning systems and is not allowed to be used outside the specified field of application, especially in aircraft or in any other airborne means of transport.**
- **Only authorised specialists may carry out installation.**
  All applicable legal or institutional installation regulations must be complied with during installation.
- **The device may not be opened by the user nor by anyone else other than a trained specialist. It does not contain any parts that can be replaced or repaired by the user.**
- **The device contains electrical and electronic components and is not permitted to be disposed of as household refuse. All locally valid regulations and requirements must be observed.**

Product features

Application

The BKN230-24MP is used as
- Power supply unit
- Connection socket
- MP-Bus interface

for digital fire protection damper actuators of the Top-Line series (e.g. BF24TL-T-ST).

Mode of operation

The BKN230-24MP provides the intelligent fire protection damper actuators of the Top-Line series (e.g. BF24TL-T-ST), in decentralised fashion, with the suitable supply voltage. This permits the implementation of long MP-Bus lines (up to 800 m).
Up to eight bus nodes can be connected in parallel and controlled and monitored by a master device (DDC with MP interface).

Properties

- Built-in LED green for signaling the supply voltage
- Connection for potential-free smoke detector contact
- Plug for BELIMO PC-Tool connection
- Plug for Top-Line fire protection damper actuator

Accessories

Description
BELIMO PC-Tool (MFT-P) for diagnostics, service, OEM settings. Communication between MP-Bus and actuator is interrupted while the PC-Tool is plugged in.
ZIP-USB-MP (interface set for the PC)
ZTH-GEN adjustment and diagnostic tool

Electrical installation

Connections

1. **Power supply: AC 230 V**
2. **Voltage indicator** (LED green)
3. **Connecting terminals for local smoke detector contact**
4. **Plug for BELIMO PC-Tool**
5. **Plug for BELIMO Top-Line fire protection actuator**
6. **Plug for MP-Bus network**
7. **Cable feed-through for smoke detector contact**
8. **Cable feed-through** (e.g. for MP-Bus)
9. **Cable feed-through** (e.g. BELIMO actuator)
10. **Cable feed-through** (e.g. PC-Tool)

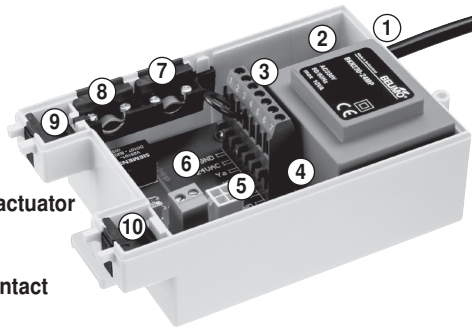

Please note!
- Pull out the AC 230V mains plug before opening the housing cover!
- Always connect the MP-Bus to plug 6, never directly to connection terminal 4!

Wiring diagram

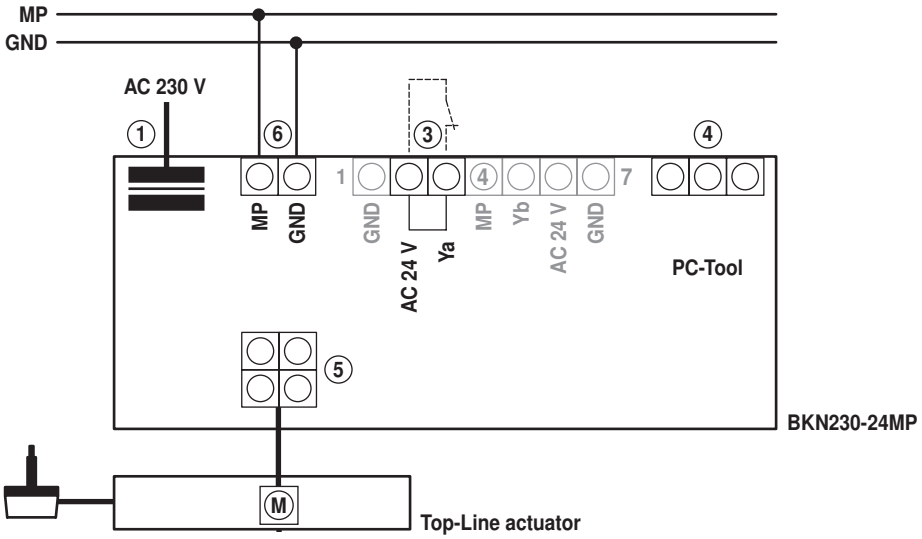

Electrical installation *(continued)*

Principle diagram

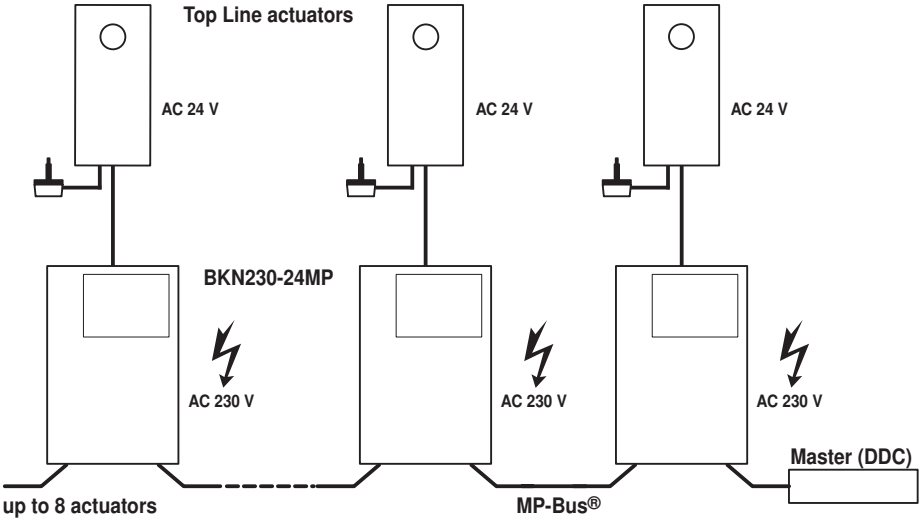

Topology

Each actuator is provided with voltage on-site. The communication line is therefore comprised of only two wires, for which no special requirements are specified, i.e. ferrule resistors or shielded conductors are not required.
The maximum permissible conductor length of the MP-Bus thereby is 800 m (0.75 m²).

Note
For safety reasons, BELIMO recommends that motorised fire protection dampers be operated only on separate networks.

Addressing

Addressing is accomplished by the Master, either semi-automatically by activating the hand crank on the actuator or manually via the ID number of the actuator. The address is thereby stored in the Top-Line actuator itself.

Dimensions [mm]

Dimensional drawings

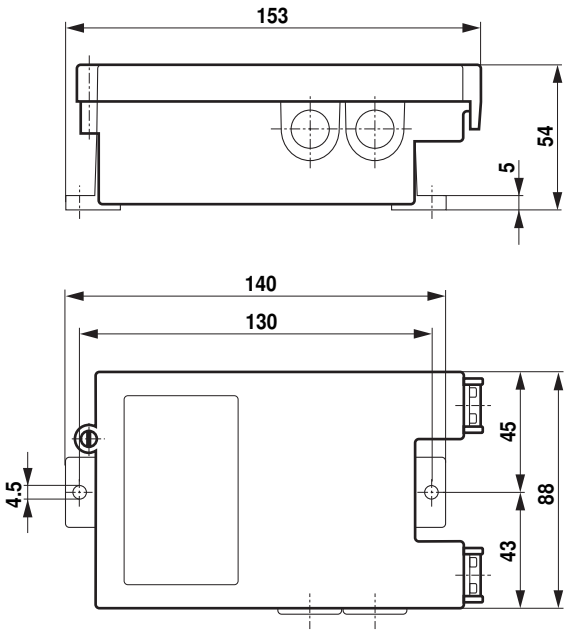

Typical applications

Example:
Fire alarm via digital input DI

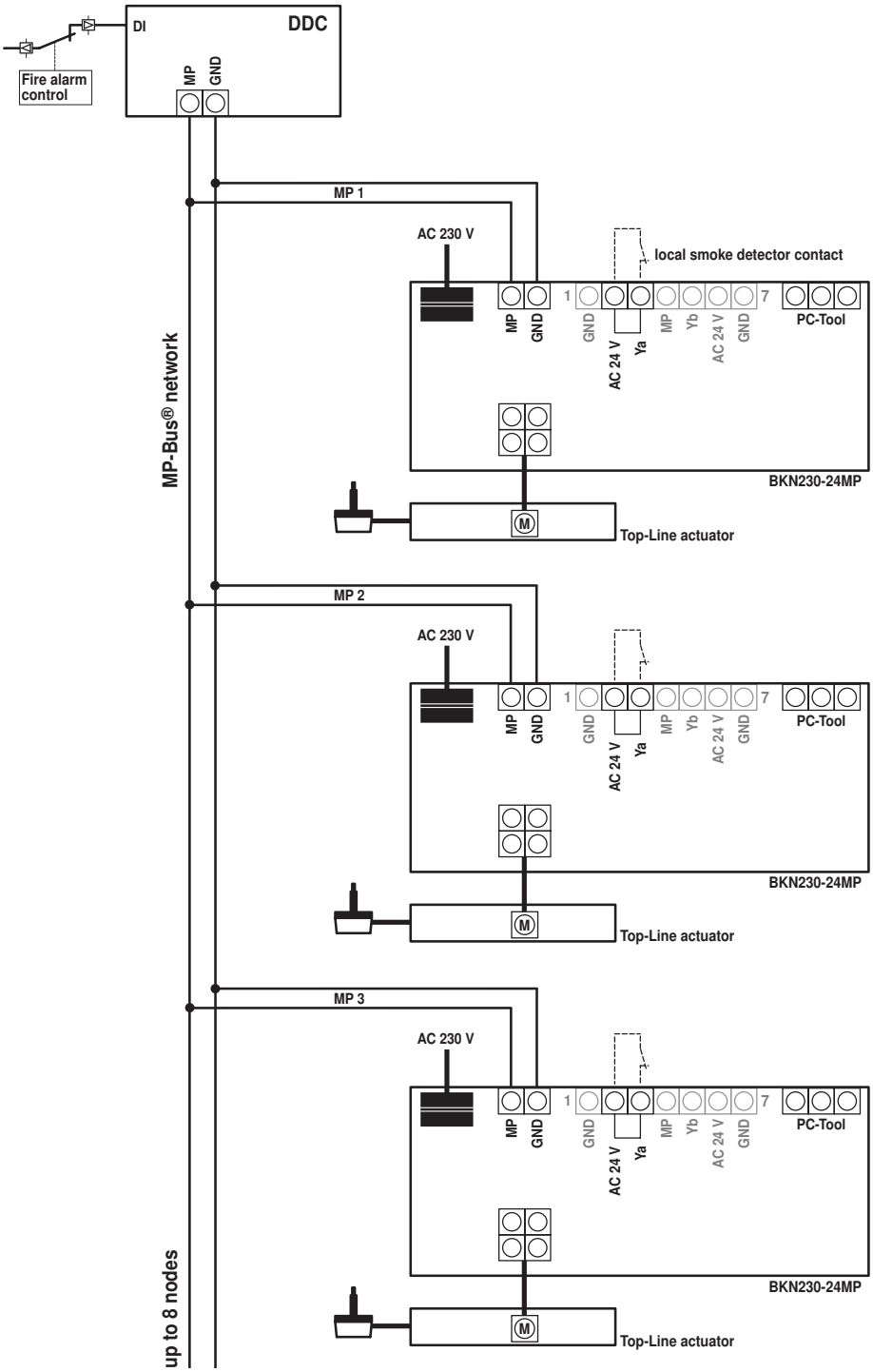

Note
External, local smoke detectors with potential-free normally closed (nc) contacts can be connected to the BKN230-24MP if required.

Features

Top-Line fire protection actuators are connected via BKN230-24MP and MP-Bus to one DDC controller with MP interface. The fire alarm control contact is read in by the DDC controller via a digital input.

Recommended application concept

If the emergency closing command arrives via the MP-Bus, then the status of the fire protection dampers can also be queried via MP-Bus after the emergency closing.

Addressing:

Addressing is accomplished by the Master, either semi-automatically by activating the hand crank on the actuator or manually via the ID number of the actuator. The address is thereby stored in the Top-Line actuator itself.