# MAGNUM SPLIT WAFER

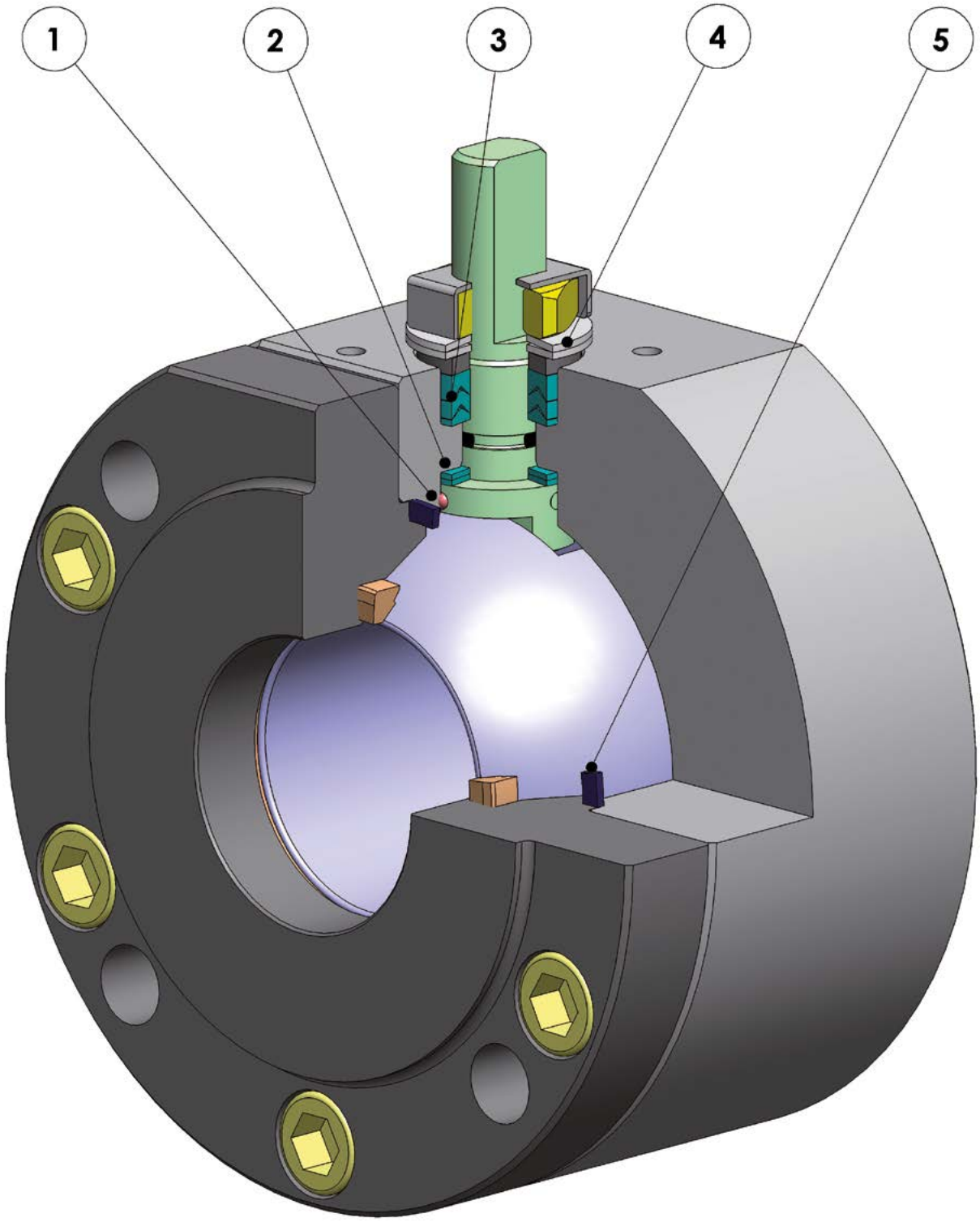

# FEATURES & BENEFITS

| | | |
|---|---|---|
| 1 | Antistatic device (continuità elettrica tra sfera, stelo e corpo)<br>*Antistatic device ((electrical continuity between ball, stem and body)* | Si evitano cariche elettrostatiche che potrebbero essere causa d'innesco in ambienti infiammabili e/o esplosivi<br>*Static electricity is avoided which can cause sparks and fire in an inflammable/explosive environment* |
| | | Sicurezza garantita del contatto durante tutta la vita della valvola<br>*Contact safety throughout the entire life of the valve* |
| 2 | Doppio anello antifrizione<br>*Double antifriction washer* | Garantisce una minor coppia di azionamento della valvola<br>*Less Breakaway Torque is granted* |
| | | Minor usura rispetto all'esecuzione con singolo anello<br>*Less wear comparing with the execution with the single washer* |
| 3 | Pacco guarnizioni a "v" con 3 guarnizioni più o-ring<br>*"V" seals pack; 3 seals + o-ring* | Si garantisce una perfetta tenuta anche dopo un numero elevato di cicli<br>*It ensures a perfect tightness even after a high number of cycles* |
| 4 | Molle a tazza sulla tenuta dello stelo<br>*Spring washer on the shaft seal* | Garantiscono il recupero dei giochi dovuti all'usura causata dal movimento semirotatorio dell'albero evitando perdite vero l'esterno<br>*Guarantee of the recovery of the gap due to the wear caused by the rotational movement of the shaft avoiding leakage towards the outside part.* |
| | | Consentono di mantenere energizzate le guarnizoini tipo "chevron" (a V), evitando perdite verso l'esterno, a fronte di notevoli escursioni termiche<br>*Allow to maintain energized the "chevron" seals (V), thus avoiding any leakage to the outside, against huge temperature excursions* |
| 5 | Tenuta elasticizzata in grafite<br>*Stretch Graphite seal* | Garantisce una tenuta verso l'esterno indipendentemente dalle escursioni termiche a cui è sottoposta la valvola<br>*Tightness towards outside is granted, independently by the thermal excursions to which the valve is subjected* |
| | Maggiore precisione nell'allineamento degli assi grazie alla lavorazione dal grezzo al finito con un unico posizionamento<br>*Greater precision in the alignment of axes due to a unique positioning in the process machining from raw material to finished valve* | Maggior vita della valvola stessa<br>*Longer lifetime of the valve* |
| | | Minor coppia di azionamento<br>*Less breakaway torque* |
| | Corpo valvola in acciaio al carbonio realizzato con materiale normalizzato certificato NACE in esecuzione standard<br>*Valve body in carbon steel made with NACE certified material as standard* | Garantisce una maggior resistenza alla corrosione<br>*Greater corrosion resistance* |
| | | Maggior duttilità del materiale<br>*Greater ductility of the material* |
| | Processo produttivo interamente eseguito in OMAL<br>*100% in- house manufacturing process technology* | Massimo controllo in tutte le fasi di lavorazione<br>*Maximum control and accuracy in all the stages of the manufacturing process* |
| | | Possibilità di fornire rapidamente esecuzioni speciali richieste dal cliente<br>*Flexibility in supply quickly special executions requested by customers* |
| | Certificato "Fire Safe"<br>*"Fire safe" Certificate* | Garantisce la tenuta della valvola anche in caso di incendio<br>*Guarantees the tightness of the valve also in case of fire* |
| | Certificato ATEX<br>*ATEX Certificate* | Ne consente l'installazione in presenza di ambiente potenzialmente esplosivo<br>*Installation is possible in a potential explosive environment* |
| | Certificazione "TA LUFT fugitive emission"<br>*TA LUFT fugitive emission Certificate* | Garantisce un elevato grado di sicurezza della tenuta stelo verso l'esterno<br>*High level of safety of the tightness towards the outside is granted* |
| | Certificato PED<br>*PED Certificate* | Piena conformità alle norme di sicurezza europee per i dispositivi in pressione<br>*Full compliance with European Safety Standards for Pressure Equipment* |
| | Certificato fino a SIL 3<br>*UP to SIL 3 certified* | Elevato livello di sicurezza funzionale<br>*Guarantee of the high level of functional safety* |

# MAGNUM SPLIT WAFER PN 16-40 ANSI 150-300

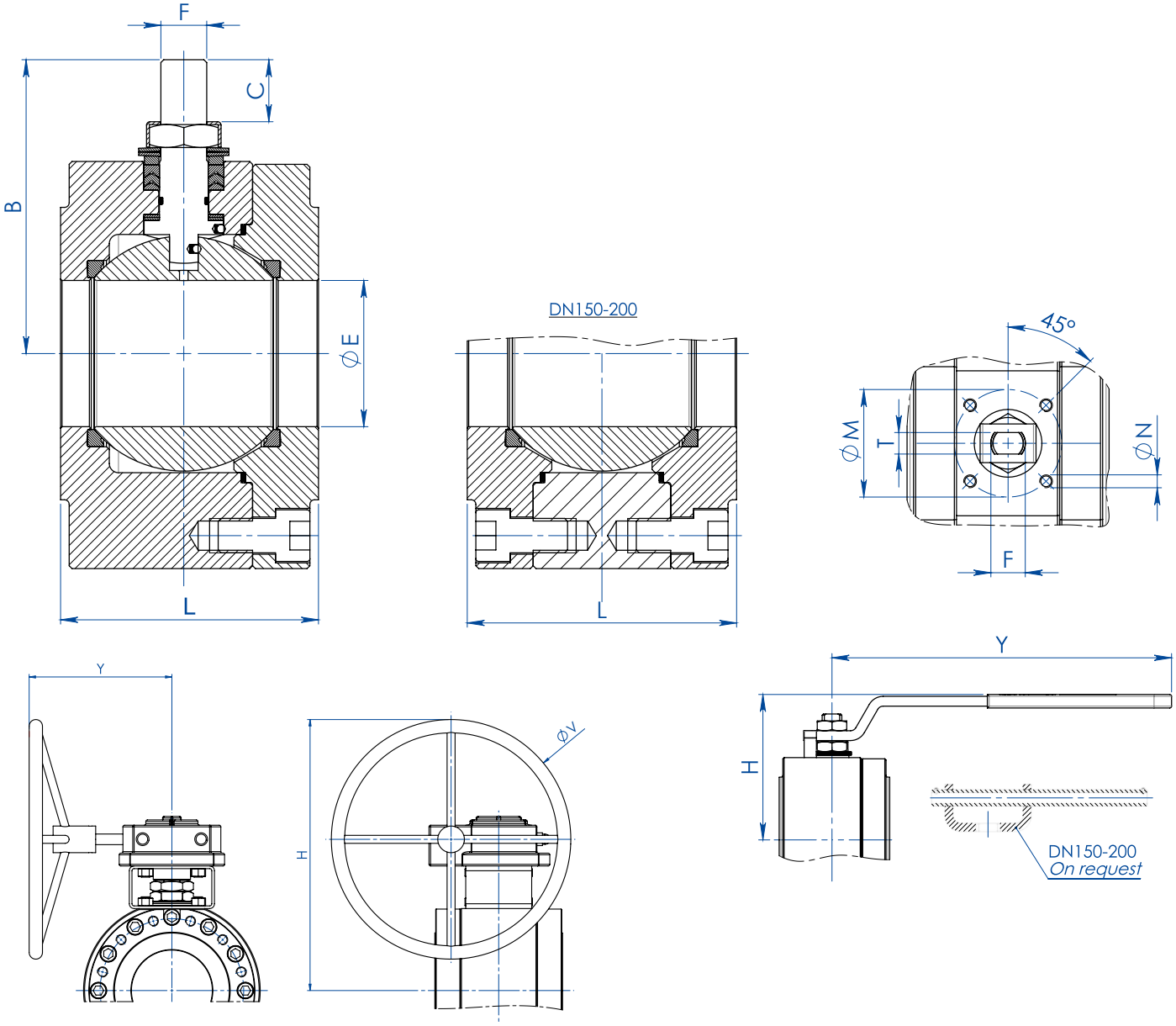


| DIMENSIONI *DIMENSIONS* | | | | | | | | | | | | | |
|---|---|---|---|---|---|---|---|---|---|---|---|---|---|
| **MISURA** *SIZE* | | **ØE** | **L** | **B** | **C** | **ATT.ISO** | **ØM** | **ØN** | **F/T** | **H** | **Y** | **ØV** | **KIT LEVA** *LEVER KIT* |
| **DN [mm]** | **[inch]** | | | | | | | | | | | | |
| DN 15 | 1/2" | 13 | 53 | 52 | 10 | F03 | 36 | M5 | 10/6 | 71 | 140 | --- | KLV58004 |
| DN 20 | 3/4" | 19 | 53 | 55 | 10 | F03 | 36 | M5 | 10/6 | 73 | 140 | --- | KLV58004 |
| DN 25 | 1" | 25 | 58 | 68 | 15 | F04 | 42 | M5 | 12/8 | 87 | 150 | --- | KLV58006 |
| DN 32 | 1" 1/4 | 32 | 65 | 73 | 15 | F04 | 42 | M5 | 12/8 | 91 | 150 | --- | KLV58006 |
| DN 40 | 1" 1/2 | 38 | 79 | 93 | 21 | F05 | 50 | M6 | 16/10 | 108 | 275 | --- | KLV58008 |
| DN 50 | 2" | 51 | 90 | 102 | 21 | F05 | 50 | M6 | 16/10 | 118 | 275 | --- | KLV58008 |
| DN 65 | 2" 1/2 | 64 | 107 | 130,5 | 28 | F07 | 70 | M8 | 22/14 | 143 | 350 | --- | KLV58010 |
| DN 80 | 3" | 76 | 120 | 137,5 | 28 | F07 | 70 | M8 | 22/14 | 150 | 350 | --- | KLV58010 |
| DN 100 | 4" | 102 | 167 | 172 | 35 | F10 | 102 | M10 | 30/18 | 198 | 450 | --- | KLV58012 |
| DN 125 | 5" | 118 | 180 | 182 | 35 | F10 | 102 | M10 | 30/18 | 208 | 450 | --- | KLV58012 |
| DN 150 PN16-ANSI150 (*) | 6" | 152 | 240 | 227,5 | 40,5 | F14 | 140 | M16 | 45/30 | 522 | 326 | 400 | --- |
| DN 150 PN25-40 - ANSI300 | 6" | 152 | 240 | 227,5 | 40,5 | F14 | 140 | M16 | 45/30 | 522 | 347,5 | 600 | --- |
| DN 200 PN16-PN25-ANSI150 (*) | 8" | 203 | 314 | 274 | 44,8 | F14 | 140 | M16 | 52/35 | 516 | 347 | 500 | --- |
| DN 200 PN40 | 8" | 203 | 314 | 274 | 44,8 | F14 | 140 | M16 | 52/35 | 614 | 348 | 500 | --- |

Versione STANDARD con riduttore manuale per DN150 e DN200. *STANDARD version with manual gearbox for DN150 and DN200.*
(*) A RICHIESTA versione con leva. *ON REQUEST version with manual lever.*

# MAGNUM SPLIT WAFER PN 16-40 ANSI 150-300

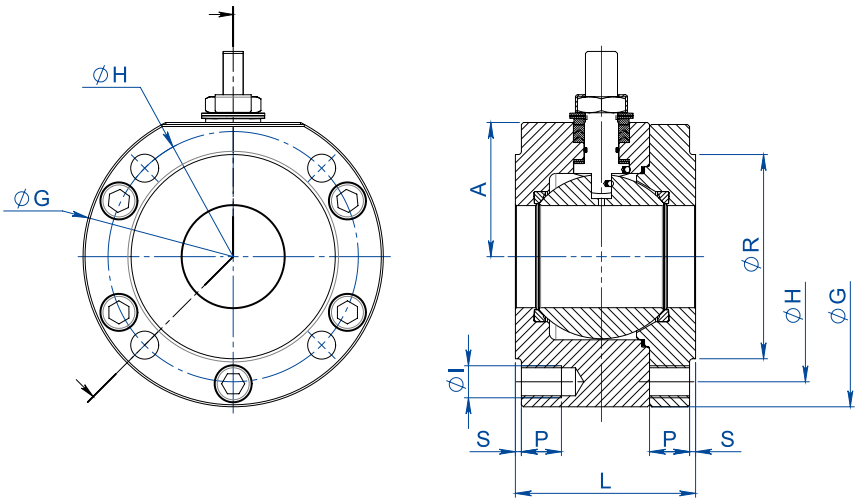


## DIMENSIONI *DIMENSIONS* -PN-

| MISURA *SIZE* DN [mm] | [inch] | PN | A | ØG | ØR | S | ØH | N°FORI *HOLES N°* | ØI | P | Kg | L | KIT GUARNIZIONI *SEALS KIT* |
|---|---|---|---|---|---|---|---|---|---|---|---|---|---|
| DN 15 | 1/2" | PN 16-40 | 32 | 90 | 45 | 2 | 65 | 4 | M12 | 15 | 2,1 | 53 | KGBV485040 |
| DN 20 | 3/4" | PN 16-40 | 35 | 100 | 58 | 2 | 75 | 4 | M12 | 14 | 2,4 | 53 | KGBV485050 |
| DN 25 | 1" | PN 16-40 | 42 | 110 | 68 | 2 | 85 | 4 | M12 | 16 | 3,5 | 58 | KGBV485060 |
| DN 32 | 1" 1/4 | PN 16-40 | 47 | 130 | 78 | 2 | 100 | 4 | M16 | 20 | 5,2 | 65 | KGBV485070 |
| DN 40 | 1" 1/2 | PN 16-40 | 58 | 140 | 88 | 3 | 110 | 4 | M16 | 20 | 7,5 | 79 | KGBV485080 |
| DN 50 | 2" | PN 16-40 | 67 | 150 | 102 | 3 | 125 | 4 | M16 | 20 | 9,7 | 90 | KGBV485090 |
| DN 65 | 2" 1/2 | PN 16 | 83 | 178 | 122 | 3 | 145 | 4 | M16 | 20 | 16,4 | 107 | KGBV485100 |
| DN 65 | 2" 1/2 | PN 25-40 | 83 | 178 | 122 | 3 | 145 | 8 | M16 | 20 | 16,1 | 107 | KGBV485100 |
| DN 80 | 3" | PN 16-40 | 90 | 190 | 138 | 3 | 160 | 8 | M16 | 20 | 20,2 | 120 | KGBV485110 |
| DN 100 | 4" | PN 16 | 107 | 235 | 158 | 3 | 180 | 8 | M16 | 20 | 40,4 | 167 | KGBV485120 |
| DN 100 | 4" | PN 25-40 | 107 | 235 | 162 | 3 | 190 | 8 | M20 | 25 | 40,5 | 167 | KGBV485120 |
| DN 125 | 5" | PN 16 | 117 | 250 | 188 | 3 | 210 | 8 | M16 | 25 | 48,2 | 180 | KGBV485130 |
| DN 125 | 5" | PN 25-40 | 125 | 270 | 188 | 3 | 220 | 8 | M24 | 30 | 57,9 | 180 | KGBV485130 |
| DN 150(*) | 6" | PN 16 | 154 | 332 | 212 | 3 | 240 | 8 | M20 | 25 | 109,3 | 240 | KGBV485140 |
| DN 150 | 6" | PN 25-40 | 154 | 332 | 218 | 3 | 250 | 8 | M24 | 24 | 111,5 | 240 | KGBV48514D |
| DN 200(*) | 8" | PN 16 | 188 | 396 | 268 | 3 | 295 | 12 | M20 | 30 | 191,8 | 314 | KGBV485150 |
| DN 200(*) | 8" | PN 25 | 188 | 396 | 278 | 3 | 310 | 12 | M24 | 30 | 196,5 | 314 | KGBV485150 |
| DN 200 | 8" | PN 40 | 195 | 408 | 285 | 3 | 320 | 12 | M27 | 30 | 220 | 314 | KGBV48515D |

## DIMENSIONI *DIMENSIONS* -ANSI-

| MISURA *SIZE* DN [mm] | [inch] | ANSI | A | ØG | ØR | S | ØH | N°FORI *HOLES N°* | ØI | P | Kg | L | KIT GUARNIZIONI *SEALS KIT* |
|---|---|---|---|---|---|---|---|---|---|---|---|---|---|
| DN 15 | 1/2" | ANSI 150 | 32 | 90 | 35,1 | 1,6 | 60,5 | 4 | 1/2"UNC | 16 | 2,1 | 53 | KGBV485040 |
| DN 15 | 1/2" | ANSI 300 | 34 | 90 | 35,1 | 1,6 | 66,5 | 4 | 1/2"UNC | 16 | 2,1 | 53 | KGBV485040 |
| DN 20 | 3/4" | ANSI 150 | 35 | 100 | 42,9 | 1,6 | 69,8 | 4 | 1/2"UNC | 16 | 2,5 | 53 | KGBV485050 |
| DN 20 | 3/4" | ANSI 300 | 40 | 110 | 42,9 | 1,6 | 82,6 | 4 | 5/8"UNC | 16 | 3,1 | 53 | KGBV485050 |
| DN 25 | 1" | ANSI 150 | 42 | 110 | 50,8 | 1,6 | 79,2 | 4 | 1/2"UNC | 16 | 3,4 | 58 | KGBV485060 |
| DN 25 | 1" | ANSI 300 | 45 | 118 | 50,8 | 1,6 | 88,9 | 4 | 5/8"UNC | 20 | 3,8 | 58 | KGBV485060 |
| DN 32 | 1" 1/4 | ANSI 150 | 47 | 130 | 63,5 | 1,6 | 89 | 4 | 1/2"UNC | 20 | 5,2 | 65 | KGBV485070 |
| DN 32 | 1" 1/4 | ANSI 300 | 47 | 130 | 63,5 | 1,6 | 98,6 | 4 | 5/8"UNC | 20 | 5,2 | 65 | KGBV485070 |
| DN 40 | 1" 1/2 | ANSI 150 | 58 | 140 | 73 | 1,6 | 98,6 | 4 | 1/2"UNC | 20 | 7,5 | 79 | KGBV485080 |
| DN 40 | 1" 1/2 | ANSI 300 | 58 | 150 | 73 | 1,6 | 114,3 | 4 | 3/4"UNC | 22 | 8,6 | 79 | KGBV485080 |
| DN 50 | 2" | ANSI 150 | 67 | 150 | 91,9 | 1,6 | 120,6 | 4 | 5/8"UNC | 20 | 9,7 | 90 | KGBV485090 |
| DN 50 | 2" | ANSI 300 | 73 | 160 | 91,9 | 1,6 | 127,0 | 8 | 5/8"UNC | 20 | 11,2 | 90 | KGBV485090 |
| DN 65 | 2" 1/2 | ANSI 150 | 83 | 178 | 104,6 | 1,6 | 139,7 | 4 | 5/8"UNC | 20 | 16,5 | 107 | KGBV485100 |
| DN 65 | 2" 1/2 | ANSI 300 | 89 | 190 | 104,6 | 1,6 | 149,4 | 8 | 3/4"UNC | 25 | 18,7 | 107 | KGBV485100 |
| DN 80 | 3" | ANSI 150 | 90 | 190 | 127 | 1,6 | 152,4 | 4 | 5/8"UNC | 20 | 20,7 | 120 | KGBV485110 |
| DN 80 | 3" | ANSI 300 | 96 | 205 | 127 | 1,6 | 168,1 | 8 | 3/4"UNC | 25 | 24,0 | 120 | KGBV485110 |
| DN 100 | 4" | ANSI 150 | 107 | 235 | 157,2 | 1,6 | 190,5 | 8 | 5/8"UNC | 20 | 40,7 | 167 | KGBV485120 |
| DN 100 | 4" | ANSI 300 | 115 | 250 | 157,2 | 1,6 | 200,2 | 8 | 3/4"UNC | 25 | 48,2 | 167 | KGBV485120 |
| DN 125 | 5" | ANSI 150 | 117 | 250 | 185,7 | 1,6 | 215,9 | 8 | 3/4"UNC | 30 | 48,3 | 180 | KGBV485130 |
| DN 150(*) | 6" | ANSI 150 | 154 | 332 | 215,9 | 1,6 | 241,3 | 8 | 3/4"UNC | 25 | 110,3 | 240 | KGBV485140 |
| DN 150 | 6" | ANSI 300 | 154 | 332 | 215,9 | 1,6 | 269,7 | 12 | 3/4"UNC | 25 | 112 | 240 | KGBV48514D |
| DN 200(*) | 8" | ANSI 150 | 188 | 396 | 269,7 | 1,6 | 298,4 | 8 | 3/4"UNC | 30 | 193,7 | 314 | KGBV485150 |

Versione STANDARD con riduttore manuale per DN150 e DN200. *STANDARD version with manual gearbox for DN150 and DN200.*
(*) A RICHIESTA versione con leva. *ON REQUEST version with manual lever.*

# MAGNUM SPLIT WAFER PN 16-40 ANSI 150-300

## DIAGRAMMA PRESSIONE/TEMPERATURA PER VALVOLE CON CORPO IN ACCIAIO AL CARBONIO
## *TEMPERATURE/PRESSURE DIAGRAM FOR CARBON STEEL VALVE*

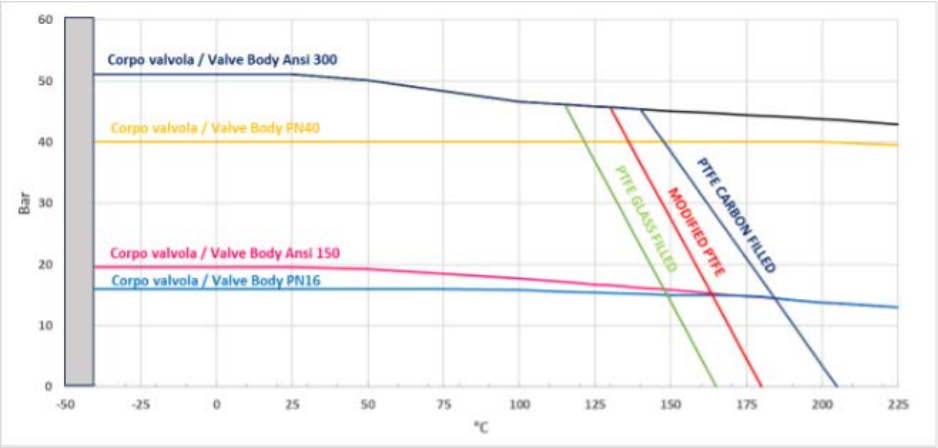


## DIAGRAMMA PRESSIONE/TEMPERATURA PER VALVOLE CON CORPO IN ACCIAIO INOX
## *TEMPERATURE/PRESSURE DIAGRAM FOR STAINLESS STEEL VALVE*

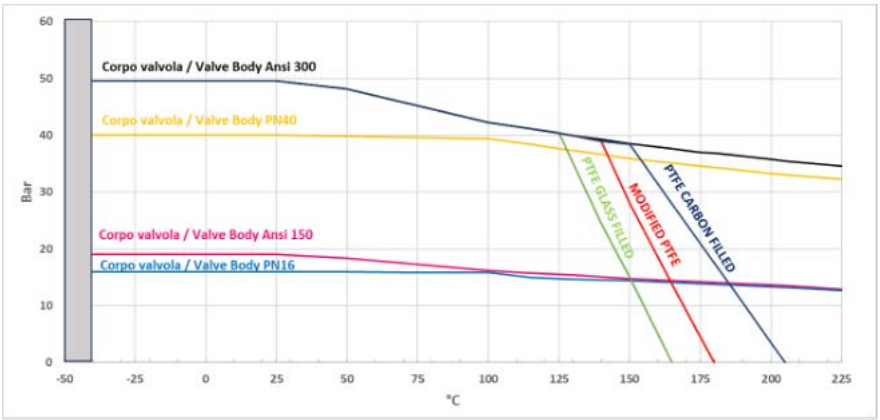


## DIAGRAMMA PORTATA/PERDITA DI CARICO E COEFFICIENTE NOMINALE Kv
## *FLOW/PRESSURE LOSS DIAGRAM AND Kv NOMINAL COEFFICIENT*

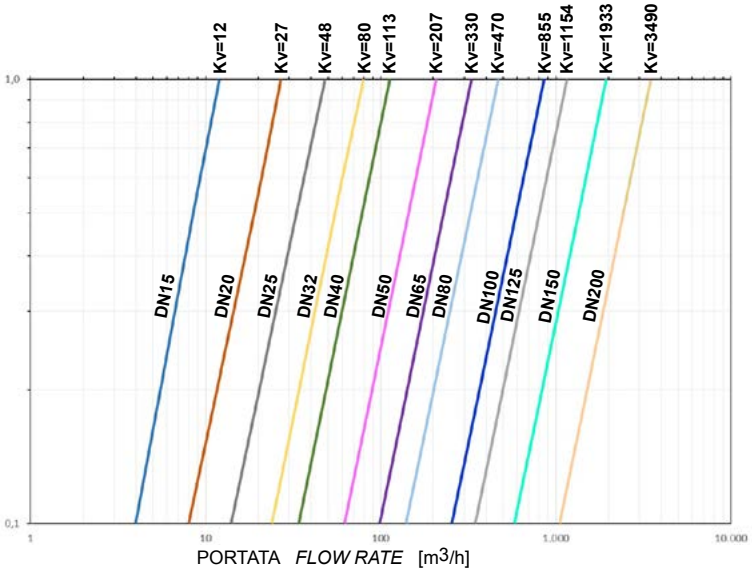


Il valore Kv è il valore di portata in $m^3/h$ (con acqua a 15°C) che provoca la caduta di pressione di 1 bar.

*Kv is the coefficient, expressed in $m^3/h$ (with water at 15°C) causing a pressure loss of 1 bar.*

# MAGNUM SPLIT WAFER PN 16-40 ANSI 150-300

| COPPIE DI SPUNTO IN Nm CON SEGGIO IN TFM 1600 E CON FLUIDO INTERCETTATO ACQUA (*)<br>*BREAKAWAY TORQUE IN Nm WITH TFM 1600 SEAT AND WATER INTERCEPTED FLUID (*)* | | | | | | | | | | | | |
|---|---|---|---|---|---|---|---|---|---|---|---|---|
| **MISURA *SIZE*** | DN 15 | DN 20 | DN 25 | DN 32 | DN 40 | DN 50 | DN 65 | DN 80 | DN 100 | DN 125 | DN 150 | DN 200 |
| 0 bar | | | | | | | | | | | | |
| PN16 bar | 8 | 13 | 18 | 27 | 37 | 61 | 80 | 120 | 220 | 270 | 450 | 850 |
| PN25 bar | 9,5 | 15 | 20 | 29 | 40 | 67 | 95 | 130 | 240 | 383 | | |
| PN40 bar | 11 | 17 | 21 | 31 | 41 | 75 | 110 | 165 | 290 | 510 | | |
| Ansi 150-20 bar | 9 | 14 | 19 | 28 | 38 | 65 | 90 | 128 | 225 | 360 | 480 | 910 |
| Ansi 300-50 bar | 12 | 19 | 21 | 32 | 42 | 80 | 120 | 170 | 300 | 570 | | |

(*): qualora si intercettino fluidi sgrassanti e/o contenenti particolato solido le coppie di manovra possono risultare maggiorate rispetto a quanto riportato in tabella.

*(*): If not lubricated fluids and/or fluids containing solid particles are intercepted, torques could be higher than those in the table.*

I valori della coppia in Nm possono variare in funzione della temperatura e del fluido. Considerare un fattore di sicurezza pari a 1.4. Con frequenti cicli di apertura e chiusura la coppia di manovra può diminuire sensibilmente rispetto a quella iniziale.

*Torque can vary depending on temperature and type of fluid, a safety factor 1.4 must be applied. Torque can drop on high frequency of operation.*

**Il dimensionamento degli attuatori pneumatici è stato fatto considerando una pressione minima di alimentazione pari a 5,6 barg.**
***The sizing of pneumatic actuators has been done considering a minimum supply pressure of 5,6 barg.***

# MAGNUM SPLIT WAFER PN 16-40 ANSI 150-300
# ACCIAIO AL CARBONIO *CARBON STEEL*

## ESECUZIONE STANDARD
- Sfera flottante contenuta, passaggio totale.
- Tenuta soft-seat PTFE Modificato.
- Norme per flange d'attacco EN 1092-1; ASME B16.5.
- Temperature di utilizzo vedi diagramma pressione temperatura.
- Classe di pressione: PN16-40; ANSI 150-300.
- Classe di tenuta: EN12266-1 rate A.
- Fluido intercettato: aria, acqua, gas, prodotti petroliferi.
- Antistatic device EN12266-2.
- Tenuta stelo: pacco a V di serie in PTFE Modificato.
- Tenuta addizionale su stelo con O-ring FKM.
- Stelo anti Blow-out.
- Foratura piano per attuatore a norma ISO 5211.
- Angolo di chiusura >7°.
- Trattamento superficiale brunitura.

## *STANDARD FEATURES*
- *No protuding floating ball, full bore.*
- *Soft-seat seal Modified PTFE.*
- *Standard for connecting flanges: EN 1092-1; ASME B16.5.*
- *Operating temperature see temperature pressure diagram.*
- *Pressure class: PN16-40; ANSI 150-300.*
- *Tightness Class: EN12266-1 rate A.*
- *Intercepted fluid: air, water, gas, petroleum and petrochemical products.*
- *Antistatic device EN12266-2.*
- *Stem seal: Modified PTFE V-pack.*
- *Additional seal on stem with FKM O-ring.*
- *Anti Blow-out stem.*
- *Actuator connection as per standard ISO 5211.*
- *Closing angle >7°.*
- *Superficial treatment: blueing.*

## ESECUZIONI A RICHIESTA
- Esecuzione per temperatura -40 C° in LF2.
- Per altri tipi di flangiature contattare il nostro ufficio commerciale.
- Guarnizioni di tenuta in:PTFE caricato vetro (PTFE-GF), PTFE caricato carbografite (PTFE-CF). Per altri tipi di materiale contattare il nostro ufficio commerciale.
- Esecuzione monodirezionale con foro di compensazione della pressione nella sfera.
- Leva inox.
- Dadi e molle stelo inox.
- Per esecuzioni con materiali (corpo/sfera/stelo) diversi dallo standard contattare il nostro ufficio commerciale.
- Trattamento superficiale: zincatura bianca, verniciatura epossidica, (per altri trattamenti contattare il nostro ufficio commerciale).
- Marcatura e certificato ATEX **A RICHIESTA.**

## *FEATURES ON REQUEST*
- *LF2 carbon steel for low temperature execution (-40 C°).*
- *For other flange types please contact our sales department.*
- *Sealing in: PTFE reinforced with glass (PTFE-GF), PTFE reinforced with carbon-graphite* (PTFE-CF) *. For other types of materials please contact our sales department.*
- *Mono-directional version with pressure-relief hole in the ball.*
- *Stainless steel lever.*
- *For versions in materials different from the standard (body, ball, stem), please contact our sales department.*
- *Stainless steel Stem nuts and springs.*
- *Superficial treatment: white zinc coating ,epoxy coating.*
- *For other coating please contact our sales department.*
- *ATEX marking and certificate* **ON REQUEST.**

## CERTIFICAZIONI
- Conforme alla direttiva Europea 2014/68/UE PED; Fugitive Emission ISO 15848 (ISO FE BH-C03-SSA 0); TA-LUFT VDI 2440; FIRE SAFE: ISO 10497 Third ed. 2010 / API 607 Fifth ed. 2005.
- Livello di sicurezza funzionale fino a SIL 3 in accordo a IEC 61508.
- Conforme alla direttiva ATEX 2014/34/UE, certificato ATEX **A RICHIESTA.**

## *CERTIFICATIONS*
- *In compliance with European Directive 2014/68/EU PED; Fugitive Emission ISO 15848 (ISO FE BH-C03-SSA 0); TA-LUFT VDI 2440; FIRE SAFE: ISO 10497 Third ed. 2010 / API 607 Fifth ed. 2005.*
- *Safety integrity level up to SIL 3 according to the IEC 61508.*
- *In compliance with ATEX 2014/34/EU Directive , ATEX certificate* ***ON REQUEST.***

## NORME DI PROGETTAZIONE
- Spessori corpo in accordo a: ASME B16.34, ASME VIII div.1, EN 12516.
- Materiali e rating in accordo ad ASME B16.34 per valvole ANSI ed EN 12516 per valvole PN.

## *ENGINEERING STANDARDS*
- *Body thickness in compliance with: ASME B16.34, ASME VIII div.1, EN 12516.*
- *Materials and rating in compliance with ASME B16.34 for ANSI valves and EN 12516 for PN valves.*

# MAGNUM SPLIT WAFER - PN 16-40 ANSI 150-300
## ACCIAIO AL CARBONIO *CARBON STEEL*
## TABELLA DEI MATERIALI *MATERIALS TABLE*

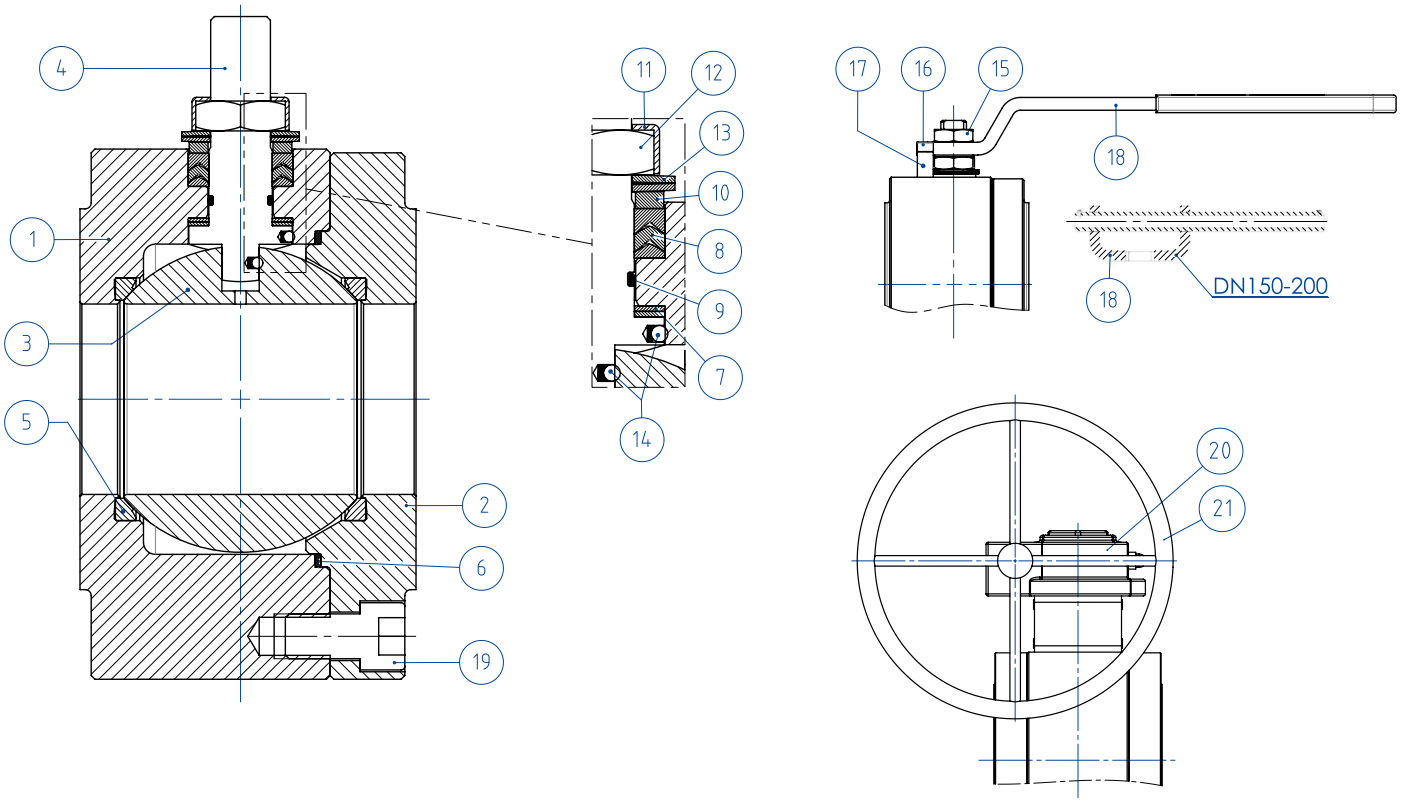


| MATERIALI *MATERIALS*<br>SPLIT WAFER PN16-40 ANSI 150-300 acciaio al carbonio *carbon steel* | | | |
|---|---|---|---|
| **N°** | **Descrizione *Description*** | **A105 *Carbon steel*** | **A350 LF2 *Carbon steel*** |
| 1 | Corpo *Body* | ASTM A105 | ASTM A350 LF2 |
| 2 | Ghiera *Ring nut* | | |
| 3 | Sfera *Ball* | ASTM A351 CF8(*) (1.4308/Gx5CrNi19-10) | |
| 4 | Stelo *Stem* | ASTM A182F6A / A479 TP.410 (**) | |
| 5* | Seggio *Seat* | PTFE Modificato *Modified PTFE* (.) (2) | |
| 6* | Guarnizione corpo ghiera *Body-ring nut gasket* | GRAFOIL | |
| 7* | Tenuta inferiore stelo *Stem lower sealing* | PTFE Modificato *Modified PTFE* (.) | |
| 8* | Pacco a V *Chevron rings* | PTFE Modificato *Modified PTFE* (.) | |
| 9* | O-ring stelo *Stem o-ring* | FKM (.) | |
| 10 | Anello premiguarnizione *Packing gland ring* | Acciaio al carbonio zincato *Carbon steel galvanized* (x) (1) | |
| 11 | Piastra blocca dado *Stop nut plate* | 304 S.S. | |
| 12 | Dado stelo *Stem nut* | Acciaio al carbonio zincato *Carbon steel galvanized* (x) | |
| 13 | Molle a tazza *Springs washer* | Acciaio al carbonio zincato *Carbon steel galvanized* (xx) | |
| 14 | Dispositivo antistatico *Antistatic device* | 316 S.S. | |
| 15 | Controdado *Lock nut* | Acciaio al carbonio zincato *Carbon steel galvanized* (x) | |
| 16 | Vite di fermo *Holder screw* | A2-70 (304 S.S.) | |
| 17 | Fermo di posizione *Holder screw* | Acciaio al carbonio zincato *Carbon steel galvanized* (x) | |
| 18 | Leva *Lever* | Fe37 zincato - *Galvanized* (x) | |
| 19 | Vite corpo-ghiera *Body-ring nut screw* | 8.8 *Galvanized* | A2.70 (304 S.S) |
| 20 | Riduttore *Gear box* | Ghisa (verniciato) *Cast iron (painted)* | |
| 21 | Volantino *Handwheel* | Acciaio al carbonio verniciato *Carbon steel painted* | |
| * Componenti del kit di guarnizioni *Components of seals kit* | | | |

A richiesta disponibile in: *Available on request:*

(*): A351 CF8M
(**): A564 TP.630 (17-4PH)
(x): 304 s.s.
(xx): 301 s.s.
(1): per DN150 & 200 disponibile solo in 304 S.S.
*(1): for DN150 & 200 available only in 304 S.S.*
(2) DEVLON per DN150 PN25-40 - ANSI300, DN200 PN40
*(2) DEVLON for DN150 PN25-40 - ANSI300, DN200 PN40*

(.): Altri materiali disponibili a richiesta *Other materials available on request*

# MAGNUM SPLIT WAFER - PN 16-40 ANSI 150-300
## ACCIAIO AL CARBONIO *CARBON STEEL*
## ASSE LIBERO - CON LEVA - CON RIDUTTORE *FREE SHAFT - WITH LEVER - WITH GEARBOX*

### CODICI VALVOLE IN ACCIAIO AL CARBONIO: ASSE LIBERO (V__) - CON LEVA (L__) - CON RIDUTTORE (R__) -PN-
### *CARBON STEEL VALVE CODE: FREE SHAFT (V__) - WITH LEVER (L__) - WITH GEARBOX (R__) -PN-*

| MISURA *SIZE* DN [mm] | [inch] | PN | A105 *Carbon steel* | LF2 *Carbon steel* |
|---|---|---|---|---|
| DN 15 | 1/2" | PN 16-40 | V/LM404F00CAB0BBQNV00B | V/LM404F00CBB0BAQNV00B |
| DN 20 | 3/4" | PN 16-40 | V/LM405F00CAB0BBQNV00B | V/LM405F00CBB0BAQNV00B |
| DN 25 | 1" | PN 16-40 | V/LM406F00CAB0BBQNV00B | V/LM406F00CBB0BAQNV00B |
| DN 32 | 1" 1/4 | PN 16-40 | V/LM407F00CAB0BBQNV00B | V/LM407F00CBB0BAQNV00B |
| DN 40 | 1" 1/2 | PN 16-40 | V/LM408F00CAB0BBQNV00B | V/LM408F00CBB0BAQNV00B |
| DN 50 | 2" | PN 16-40 | V/LM409F00CAB0BBQNV00B | V/LM409F00CBB0BAQNV00B |
| DN 65 | 2" 1/2 | PN 16 | V/LM410E00CAB0BBQNV00B | V/LM410E00CBB0BAQNV00B |
| DN 65 | 2" 1/2 | PN 25-40 | V/LM410I00CAB0BBQNV00B | V/LM410I00CBB0BAQNV00B |
| DN 80 | 3" | PN 16-40 | V/LM411F00CAB0BBQNV00B | V/LM411F00CBB0BAQNV00B |
| DN 100 | 4" | PN 16 | V/LM412E00CAB0BBQNV00B | V/LM412E00CBB0BAQNV00B |
| DN 100 | 4" | PN 25-40 | V/LM412I00CAB0BBQNV00B | V/LM412I00CBB0BAQNV00B |
| DN 125 | 5" | PN 16 | V/LM413E00CAB0BBQNV00B | V/LM413E00CBB0BAQNV00B |
| DN 125 | 5" | PN 25-40 | V/LM413I00CAB0BBQNV00B | V/LM413I00CBB0BAQNV00B |
| DN150(*) | 6" | PN 16 | V/RM414E00CAB0BBQNV00B | V/RM414E00CBB0BAQNV00B |
| DN150 | 6" | PN 25-40 | V/RM414I00CAB0BBMNV00B | V/RM414I00CBB0BAMNV00B |
| DN200(*) | 8" | PN 16 | V/RM415E00CAB0BBQNV00B | V/RM415E00CBB0BAQNV00B |
| DN200(*) | 8" | PN 25 | V/RM415H00CAB0BBQNV00B | V/RM415H00CBB0BAQNV00B |
| DN200 | 8" | PN 40 | V/RM415J00CAB0BBMNV00B | V/RM415J00CBB0BAMNV00B |

### CODICI VALVOLE IN ACCIAIO AL CARBONIO: ASSE LIBERO (V__) - CON LEVA (L__) - CON RIDUTTORE (R__) -ANSI-
### *CARBON STEEL VALVE CODE: FREE SHAFT (V__) - WITH LEVER (L__) - WITH GEARBOX (R__) -ANSI-*

| MISURA *SIZE* DN [mm] | [inch] | ANSI | A105 *Carbon steel* | LF2 *Carbon steel* |
|---|---|---|---|---|
| DN 15 | 1/2" | ANSI 150 | V/LM404101CAB0BBQNV00B | V/LM404101CBB0BAQNV00B |
| DN 15 | 1/2" | ANSI 300 | V/LM404201CAB0BBQNV00B | V/LM404201CBB0BAQNV00B |
| DN 20 | 3/4" | ANSI 150 | V/LM405101CAB0BBQNV00B | V/LM405101CBB0BAQNV00B |
| DN 20 | 3/4" | ANSI 300 | V/LM405201CAB0BBQNV00B | V/LM405201CBB0BAQNV00B |
| DN 25 | 1" | ANSI 150 | V/LM406101CAB0BBQNV00B | V/LM406101CBB0BAQNV00B |
| DN 25 | 1" | ANSI 300 | V/LM406201CAB0BBQNV00B | V/LM406201CBB0BAQNV00B |
| DN 32 | 1" 1/4 | ANSI 150 | V/LM407101CAB0BBQNV00B | V/LM407101CBB0BAQNV00B |
| DN 32 | 1" 1/4 | ANSI 300 | V/LM407201CAB0BBQNV00B | V/LM407201CBB0BAQNV00B |
| DN 40 | 1" 1/2 | ANSI 150 | V/LM408101CAB0BBQNV00B | V/LM408101CBB0BAQNV00B |
| DN 40 | 1" 1/2 | ANSI 300 | V/LM408201CAB0BBQNV00B | V/LM408201CBB0BAQNV00B |
| DN 50 | 2" | ANSI 150 | V/LM409101CAB0BBQNV00B | V/LM409101CBB0BAQNV00B |
| DN 50 | 2" | ANSI 300 | V/LM409201CAB0BBQNV00B | V/LM409201CBB0BAQNV00B |
| DN 65 | 2" 1/2 | ANSI 150 | V/LM410101CAB0BBQNV00B | V/LM410101CBB0BAQNV00B |
| DN 65 | 2" 1/2 | ANSI 300 | V/LM410201CAB0BBQNV00B | V/LM410201CBB0BAQNV00B |
| DN 80 | 3" | ANSI 150 | V/LM411101CAB0BBQNV00B | V/LM411101CBB0BAQNV00B |
| DN 80 | 3" | ANSI 300 | V/LM411201CAB0BBQNV00B | V/LM411201CBB0BAQNV00B |
| DN 100 | 4" | ANSI 150 | V/LM412101CAB0BBQNV00B | V/LM412101CBB0BAQNV00B |
| DN 100 | 4" | ANSI 300 | V/LM412201CAB0BBQNV00B | V/LM412201CBB0BAQNV00B |
| DN 125 | 5" | ANSI 150 | V/LM413101CAB0BBQNV00B | V/LM413101CBB0BAQNV00B |
| DN150(*) | 6" | ANSI 150 | V/RM414101CAB0BBQNV00B | V/RM414101CBB0BAQNV00B |
| DN150 | 6" | ANSI 300 | V/RM414201CAB0BBMNV00B | V/RM414201CBB0BAMNV00B |
| DN200(*) | 8" | ANSI 150 | V/RM415101CAB0BBQNV00B | V/RM415101CBB0BAQNV00B |

DN200 ANSI300 disponibile a magazzino, contattare ufficio commerciale per verifica condizioni operative.
*DN200 ANSI300 on stock, check with our sales department for operating conditions.*

Versione STANDARD con riduttore manuale per DN150 e DN200. *STANDARD version with manual gearbox for DN150 and DN200.*
(*) A RICHIESTA versione con leva. *ON REQUEST version with manual lever.*

# MAGNUM SPLIT WAFER - PN 16-40
## ACCIAIO AL CARBONIO *CARBON STEEL*
## CON ATTUATORE PNEUMATICO DA *WITH DA PNEUMATIC ACTUATOR*

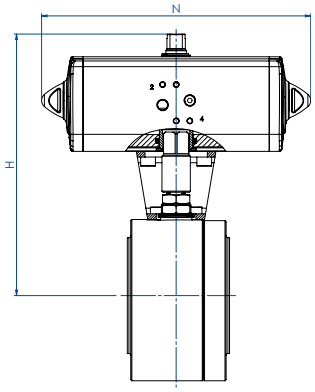


### CODICI ARTICOLI IN A105 ACCIAIO AL CARBONIO *ITEM CODES IN A105 CARBON STEEL*

| MISURA *SIZE* DN [mm] | [inch] | PN | CODICE ARTICOLO *ITEM CODE* | ATTUATORE *ACTUATOR* | KIT di montaggio *Mounting KIT* | N [mm] | H [mm] | Peso Kg *Weight Kg* |
|---|---|---|---|---|---|---|---|---|
| DN 15 | 1/2" | PN 16 | DM404E00CAB0BBQNV00BAFBA0 | DAN0015411S | KCNAAHD5312 | 159,1 | 154,2 | 3,2 |
| DN 15 | 1/2" | PN 25-40 | DM404I00CAB0BBQNV00BAFCA0 | DAN0030411S | KCNAAHD5312 | 174,3 | 161,2 | 3,5 |
| DN 20 | 3/4" | PN 16-40 | DM405F00CAB0BBQNV00BAFCA0 | DAN0030411S | KCNAAHD5312 | 174,3 | 164,2 | 3,8 |
| DN 25 | 1" | PN 16-40 | DM406F00CAB0BBQNV00BAFCA0 | DAN0030411S | KCNBCHD5315 | 174,3 | 181,2 | 6,0 |
| DN 32 | 1" 1/4 | PN 16-40 | DM407F00CAB0BBQNV00BAFDA0 | DAN0045412S | KCNBCHD5315 | 188,5 | 191,5 | 7,0 |
| DN 40 | 1" 1/2 | PN 16-40 | DM408F00CAB0BBQNV00BAFEA0 | DAN0060412S | KCNCCHD5316 | 198,1 | 208,4 | 9,8 |
| DN 50 | 2" | PN 16 | DM409E00CAB0BBQNV00BAFGA0 | DAN0106411S | KCNCCHD5317 | 237,1 | 230,3 | 13,0 |
| DN 50 | 2" | PN 25-40 | DM409I00CAB0BBQNV00BAFHA0 | DAN0120411S | KCNCCHD5317 | 257,4 | 234,0 | 13,1 |
| DN 65 | 2" 1/2 | PN 16 | DM410E00CAB0BBQNV00BAFHA0 | DAN0120411S | KCNDDHD5318 | 257,4 | 250,0 | 19,9 |
| DN 65 | 2" 1/2 | PN 25-40 | DM410I00CAB0BBQNV00BAFIA0 | DAN0180411S | KCNDDHD5319 | 289,9 | 280,5 | 21,8 |
| DN 80 | 3" | PN 16 | DM411E00CAB0BBQNV00BAFIA0 | DAN0180411S | KCNDDHD5319 | 289,9 | 287,5 | 25,9 |
| DN 80 | 3" | PN 25-40 | DM411I00CAB0BBQNV00BAFJA0 | DAN0240411S | KCNDDHD5319 | 313,6 | 291,1 | 26,7 |
| DN 100 | 4" | PN 16 | DM412E00CAB0BBQNV00BAFKA0 | DAN0360411S | KCNEEHD5321 | 339,3 | 329,0 | 51,7 |
| DN 100 | 4" | PN 25-40 | DM412I00CAB0BBQNV00BAFLA0 | DAN0480411S | KCNEFHD5332 | 387,7 | 387,7 | 52,7 |
| DN 125 | 5" | PN 16 | DM413E00CAB0BBQNV00BAFLA0 | DAN0480411S | KCNEFHD5332 | 387,7 | 362,0 | 60,4 |
| DN 125 | 5" | PN 25-40 | DM413I00CAB0BBQNV00BAFMA0 | DAN0720411S | KCNEFHD5348 | 433,0 | 383,0 | 72,6 |
| DN 150 | 6" | PN 16 | DM414E00CAB0BBQNV00BAFMA0 | DAN0720411S | KCNFGHD5364 | 433,0 | 432,0 | 127,0 |
| DN 150 | 6" | PN 25-40 | DM414I00CAB0BBMNV00BAFRA0 | DAN1920411S | KCNGGHD5600 | 601,0 | 491,7 | 150,4 |
| DN 200 | 8" | PN 16 | DM415E00CAB0BBQNV00BAFQA0 | DAN1440411S | KCNGGHD5366 | 567,0 | 524,0 | 222,0 |
| DN 200 | 8" | PN 25 | DM415H00CAB0BBQNV00BAFQA0 | DAN1440411S | KCNGGHD5366 | 567,0 | 524,0 | 224,7 |
| DN 200 | 8" | PN 40 | DM415J00CAB0BBMNV00BAFSA0 | DA2880E16D0A | KCNGHHD5367 | 667,0 | 654,0 | 343,3 |

### CODICI ARTICOLI IN LF2 ACCIAIO AL CARBONIO *ITEM CODES IN LF2 CARBON STEEL*

| MISURA *SIZE* DN [mm] | [inch] | PN | CODICE ARTICOLO *ITEM CODE* | ATTUATORE *ACTUATOR* | KIT di montaggio *Mounting KIT* | N [mm] | H [mm] | Peso Kg *Weight Kg* |
|---|---|---|---|---|---|---|---|---|
| DN 15 | 1/2" | PN 16 | DM404E00CBB0BAQNV00BAFBA0 | DAN0015411S | KCNAAHD5312 | 159,1 | 154,2 | 3,2 |
| DN 15 | 1/2" | PN 25-40 | DM404I00CBB0BAQNV00BAFCA0 | DAN0030411S | KCNAAHD5312 | 174,3 | 161,2 | 3,5 |
| DN 20 | 3/4" | PN 16-40 | DM405F00CBB0BAQNV00BAFCA0 | DAN0030411S | KCNAAHD5312 | 174,3 | 164,2 | 3,8 |
| DN 25 | 1" | PN 16-40 | DM406F00CBB0BAQNV00BAFCA0 | DAN0030411S | KCNBCHD5315 | 174,3 | 181,2 | 6,0 |
| DN 32 | 1" 1/4 | PN 16-40 | DM407F00CBB0BAQNV00BAFDA0 | DAN0045412S | KCNBCHD5315 | 188,5 | 191,5 | 7,0 |
| DN 40 | 1" 1/2 | PN 16-40 | DM408F00CBB0BAQNV00BAFEA0 | DAN0060412S | KCNCCHD5316 | 198,1 | 208,4 | 9,8 |
| DN 50 | 2" | PN 16 | DM409E00CBB0BAQNV00BAFGA0 | DAN0106411S | KCNCCHD5317 | 237,1 | 230,3 | 13,0 |
| DN 50 | 2" | PN 25-40 | DM409I00CBB0BAQNV00BAFHA0 | DAN0120411S | KCNCCHD5317 | 257,4 | 234,0 | 13,1 |
| DN 65 | 2" 1/2 | PN 16 | DM410E00CBB0BAQNV00BAFHA0 | DAN0120411S | KCNDDHD5318 | 257,4 | 250,0 | 19,9 |
| DN 65 | 2" 1/2 | PN 25-40 | DM410I00CBB0BAQNV00BAFIA0 | DAN0180411S | KCNDDHD5319 | 289,9 | 280,5 | 21,8 |
| DN 80 | 3" | PN 16 | DM411E00CBB0BAQNV00BAFIA0 | DAN0180411S | KCNDDHD5319 | 289,9 | 287,5 | 25,9 |
| DN 80 | 3" | PN 25-40 | DM411I00CBB0BAQNV00BAFJA0 | DAN0240411S | KCNDDHD5319 | 313,6 | 291,1 | 26,7 |
| DN 100 | 4" | PN 16 | DM412E00CBB0BAQNV00BAFKA0 | DAN0360411S | KCNEEHD5321 | 339,3 | 329,0 | 51,7 |
| DN 100 | 4" | PN 25-40 | DM412I00CBB0BAQNV00BAFLA0 | DAN0480411S | KCNEFHD5332 | 387,7 | 387,7 | 52,7 |
| DN 125 | 5" | PN 16 | DM413E00CBB0BAQNV00BAFLA0 | DAN0480411S | KCNEFHD5332 | 387,7 | 362,0 | 60,4 |
| DN 125 | 5" | PN 25-40 | DM413I00CBB0BAQNV00BAFMA0 | DAN0720411S | KCNEFHD5348 | 433,0 | 383,0 | 72,6 |
| DN 150 | 6" | PN 16 | DM414E00CBB0BAQNV00BAFMA0 | DAN0720411S | KCNFGHD5364 | 433,0 | 432,0 | 127,0 |
| DN 150 | 6" | PN 25-40 | DM414I00CBB0BAMNV00BAFRA0 | DAN1920411S | KCNGGHD5600 | 601,0 | 491,7 | 150,4 |
| DN 200 | 8" | PN 16 | DM415E00CBB0BAQNV00BAFQA0 | DAN1440411S | KCNGGHD5366 | 567,0 | 524,0 | 222,0 |
| DN 200 | 8" | PN 25 | DM415H00CBB0BAQNV00BAFQA0 | DAN1440411S | KCNGGHD5366 | 567,0 | 524,0 | 224,7 |
| DN 200 | 8" | PN 40 | DM415J00CBB0BAMNV00BAFSA0 | DA2880E16D0A | KCNGHHD5367 | 667,0 | 654,0 | 343,3 |

# MAGNUM SPLIT WAFER - ANSI 150-300
## ACCIAIO AL CARBONIO *CARBON STEEL*
## CON ATTUATORE PNEUMATICO DA *WITH DA PNEUMATIC ACTUATOR*

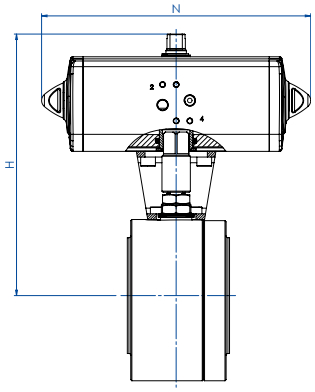


### CODICI ARTICOLI IN A105 ACCIAIO AL CARBONIO *ITEM CODES IN A105 CARBON STEEL*

| MISURA *SIZE* DN [mm] | [inch] | ANSI | CODICE ARTICOLO *ITEM CODE* | ATTUATORE *ACTUATOR* | KIT di montaggio *Mounting KIT* | N [mm] | H [mm] | Peso Kg *Weight Kg* |
|---|---|---|---|---|---|---|---|---|
| DN 15 | 1/2" | ANSI 150 | DM404101CAB0BBQNV00BAFBA0 | DAN0015411S | KCNAAHD5312 | 159,0 | 154,2 | 3,2 |
| DN 15 | 1/2" | ANSI 300 | DM404201CAB0BBQNV00BAFCA0 | DAN0030411S | KCNAAHD5313 | 174,2 | 163,2 | 3,5 |
| DN 20 | 3/4" | ANSI 150 | DM405101CAB0BBQNV00BAFCA0 | DAN0030411S | KCNAAHD5312 | 174,2 | 164,2 | 3,9 |
| DN 20 | 3/4" | ANSI 300 | DM405201CAB0BBQNV00BAFCA0 | DAN0030411S | KCNAAHD5314 | 174,2 | 169,2 | 4,5 |
| DN 25 | 1" | ANSI 150 | DM406101CAB0BBQNV00BAFCA0 | DAN0030411S | KCNBCHD5315 | 174,2 | 181,2 | 5,0 |
| DN 25 | 1" | ANSI 300 | DM406201CAB0BBQNV00BAFCA0 | DAN0030411S | KCNBCHD5249 | 174,2 | 184,2 | 5,4 |
| DN 32 | 1" 1/4 | ANSI 150 | DM407101CAB0BBQNV00BAFDA0 | DAN0045412S | KCNBCHD5315 | 188,5 | 191,5 | 7,0 |
| DN 32 | 1" 1/4 | ANSI 300 | DM407201CAB0BBQNV00BAFDA0 | DAN0045412S | KCNBCHD5315 | 188,5 | 191,5 | 7,0 |
| DN 40 | 1" 1/2 | ANSI 150 | DM408101CAB0BBQNV00BAFEA0 | DAN0060412S | KCNCCHD5316 | 198,0 | 202,5 | 9,8 |
| DN 40 | 1" 1/2 | ANSI 300 | DM408201CAB0BBQNV00BAFEA0 | DAN0060412S | KCNCCHD5316 | 198,0 | 208,4 | 10,9 |
| DN 50 | 2" | ANSI 150 | DM409101CAB0BBQNV00BAFGA0 | DAN0106411S | KCNCCHD5317 | 237,0 | 230,3 | 13,0 |
| DN 50 | 2" | ANSI 300 | DM409201CAB0BBQNV00BAFHA0 | DAN0120411S | KCNCCHD5267 | 244,1 | 240,0 | 14,6 |
| DN 65 | 2" 1/2 | ANSI 150 | DM410101CAB0BBQNV00BAFHA0 | DAN0120411S | KCNDDHD5318 | 244,1 | 250,0 | 20,0 |
| DN 65 | 2" 1/2 | ANSI 300 | DM410201CAB0BBQNV00BAFIA0 | DAN0180411S | KCNDDHD5320 | 289,9 | 286,5 | 25,0 |
| DN 80 | 3" | ANSI 150 | DM411101CAB0BBQNV00BAFIA0 | DAN0180411S | KCNDDHD5319 | 289,9 | 287,5 | 26,4 |
| DN 80 | 3" | ANSI 300 | DM411201CAB0BBQNV00BAFJA0 | DAN0240411S | KCNDDHD5320 | 313,6 | 297,1 | 31,1 |
| DN 100 | 4" | ANSI 150 | DM412101CAB0BBQNV00BAFKA0 | DAN0360411S | KCNEEHD5321 | 339,3 | 335,0 | 48,9 |
| DN 100 | 4" | ANSI 300 | DM412201CAB0BBQNV00BAFLA0 | DAN0480411S | KCNEFHD5348 | 387,6 | 359,9 | 60,5 |
| DN 125 | 5" | ANSI 150 | DM413101CAB0BBQNV00BAFLA0 | DAN0480411S | KCNEFHD5332 | 387,6 | 361,9 | 60,5 |
| DN 150 | 6" | ANSI 150 | DM414101CAB0BBQNV00BAFMA0 | DAN0720411S | KCNFGHD5364 | 433,1 | 412,0 | 126,7 |
| DN 150 | 6" | ANSI 300 | DM414201CAB0BBMNV00BAFRA0 | DAN1920411S | KCNGGHD5600 | 604,0 | 491,7 | 150,9 |
| DN 200 | 8" | ANSI 150 | DM415101CAB0BBQNV00BAFQA0 | DAN1440411S | KCNGGHD5366 | 567,1 | 484,0 | 221,9 |

### CODICI ARTICOLI IN LF2 ACCIAIO AL CARBONIO *ITEM CODES IN LF2 CARBON STEEL*

| MISURA *SIZE* DN [mm] | [inch] | ANSI | CODICE ARTICOLO *ITEM CODE* | ATTUATORE *ACTUATOR* | KIT di montaggio *Mounting KIT* | N [mm] | H [mm] | Peso Kg *Weight Kg* |
|---|---|---|---|---|---|---|---|---|
| DN 15 | 1/2" | ANSI 150 | DM404101CBB0BAQNV00BAFBA0 | DAN0015411S | KCNAAHD5312 | 159,0 | 154,2 | 3,2 |
| DN 15 | 1/2" | ANSI 300 | DM404201CBB0BAQNV00BAFCA0 | DAN0030411S | KCNAAHD5313 | 174,2 | 163,2 | 3,5 |
| DN 20 | 3/4" | ANSI 150 | DM405101CBB0BAQNV00BAFCA0 | DAN0030411S | KCNAAHD5312 | 174,2 | 164,2 | 3,9 |
| DN 20 | 3/4" | ANSI 300 | DM405201CBB0BAQNV00BAFCA0 | DAN0030411S | KCNAAHD5314 | 174,2 | 169,2 | 4,5 |
| DN 25 | 1" | ANSI 150 | DM406101CBB0BAQNV00BAFCA0 | DAN0030411S | KCNBCHD5315 | 174,2 | 181,2 | 5,0 |
| DN 25 | 1" | ANSI 300 | DM406201CBB0BAQNV00BAFCA0 | DAN0030411S | KCNBCHD5249 | 174,2 | 184,2 | 5,4 |
| DN 32 | 1" 1/4 | ANSI 150 | DM407101CBB0BAQNV00BAFDA0 | DAN0045412S | KCNBCHD5315 | 188,5 | 191,5 | 7,0 |
| DN 32 | 1" 1/4 | ANSI 300 | DM407201CBB0BAQNV00BAFDA0 | DAN0045412S | KCNBCHD5315 | 188,5 | 191,5 | 7,0 |
| DN 40 | 1" 1/2 | ANSI 150 | DM408101CBB0BAQNV00BAFEA0 | DAN0060412S | KCNCCHD5316 | 198,0 | 202,5 | 9,8 |
| DN 40 | 1" 1/2 | ANSI 300 | DM408201CBB0BAQNV00BAFEA0 | DAN0060412S | KCNCCHD5316 | 198,0 | 208,4 | 10,9 |
| DN 50 | 2" | ANSI 150 | DM409101CBB0BAQNV00BAFGA0 | DAN0106411S | KCNCCHD5317 | 237,0 | 230,3 | 13,0 |
| DN 50 | 2" | ANSI 300 | DM409201CBB0BAQNV00BAFHA0 | DAN0120411S | KCNCCHD5267 | 244,1 | 240,0 | 14,6 |
| DN 65 | 2" 1/2 | ANSI 150 | DM410101CBB0BAQNV00BAFHA0 | DAN0120411S | KCNDDHD5318 | 244,1 | 250,0 | 20,0 |
| DN 65 | 2" 1/2 | ANSI 300 | DM410201CBB0BAQNV00BAFIA0 | DAN0180411S | KCNDDHD5320 | 289,9 | 286,5 | 25,0 |
| DN 80 | 3" | ANSI 150 | DM411101CBB0BAQNV00BAFIA0 | DAN0180411S | KCNDDHD5319 | 289,9 | 287,5 | 26,4 |
| DN 80 | 3" | ANSI 300 | DM411201CBB0BAQNV00BAFJA0 | DAN0240411S | KCNDDHD5320 | 313,6 | 297,1 | 31,1 |
| DN 100 | 4" | ANSI 150 | DM412101CBB0BAQNV00BAFKA0 | DAN0360411S | KCNEEHD5321 | 339,3 | 335,0 | 48,9 |
| DN 100 | 4" | ANSI 300 | DM412201CBB0BAQNV00BAFLA0 | DAN0480411S | KCNEFHD5348 | 387,6 | 359,9 | 60,5 |
| DN 125 | 5" | ANSI 150 | DM413101CBB0BAQNV00BAFLA0 | DAN0480411S | KCNEFHD5332 | 387,6 | 361,9 | 60,5 |
| DN 150 | 6" | ANSI 150 | DM414101CBB0BAQNV00BAFMA0 | DAN0720411S | KCNFGHD5364 | 433,1 | 412,0 | 126,7 |
| DN 150 | 6" | ANSI 300 | DM414201CBB0BAMNV00BAFRA0 | DAN1920411S | KCNGGHD5600 | 604,0 | 491,7 | 150,9 |
| DN 200 | 8" | ANSI 150 | DM415101CBB0BAQNV00BAFQA0 | DAN1440411S | KCNGGHD5366 | 567,1 | 484,0 | 221,9 |

# MAGNUM SPLIT WAFER - PN 16-40
## ACCIAIO AL CARBONIO *CARBON STEEL*
## CON ATTUATORE PNEUMATICO SR *WITH SR PNEUMATIC ACTUATOR*

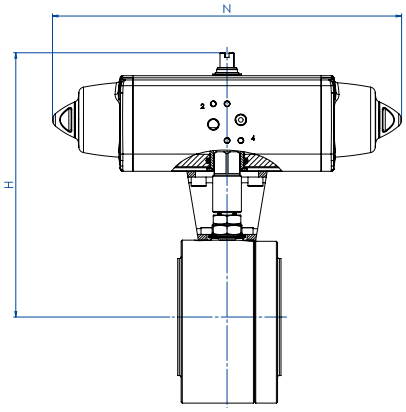


### CODICI ARTICOLI IN A105 ACCIAIO AL CARBONIO *ITEM CODES IN A105 CARBON STEEL*

| MISURA *SIZE* DN [mm] | [inch] | PN | CODICE ARTICOLO *ITEM CODE* | ATTUATORE *ACTUATOR* | KIT di montaggio *Mounting KIT* | N [mm] | H [mm] | Peso Kg *Weight Kg* |
|---|---|---|---|---|---|---|---|---|
| DN 15 | 1/2" | PN 16 | SM404E00CAB0BBQNV00BAFCA0 | SRN0015401S | KCNAAHD5312 | 233,2 | 161,2 | 3,7 |
| DN 15 | 1/2" | PN 25-40 | SM404I00CAB0BBQNV00BAFEA0 | SRN0030402S | KCNACHD5324 | 258,8 | 182,4 | 4,6 |
| DN 20 | 3/4" | PN 16-40 | SM405F00CAB0BBQNV00BAFEA0 | SRN0030402S | KCNACHD5324 | 258,8 | 185,4 | 4,9 |
| DN 25 | 1" | PN 16-40 | SM406F00CAB0BBQNV00BAFEA0 | SRN0030402S | KCNBCHD5327 | 258,8 | 192,4 | 6,1 |
| DN 32 | 1" 1/4 | PN 16-40 | SM407F00CAB0BBQNV00BAFGA0 | SRN0053401S | KCNBCHD5328 | 304,2 | 210,3 | 8,9 |
| DN 40 | 1" 1/2 | PN 16-40 | SM408F00CAB0BBQNV00BAFHA0 | SRN0060401S | KCNCCHD5317 | 338,5 | 225,0 | 11,6 |
| DN 50 | 2" | PN 16 | SM409E00CAB0BBQNV00BAFIA0 | SRN0090401S | KCNCDHD5329 | 393,7 | 264,5 | 16,7 |
| DN 50 | 2" | PN 25-40 | SM409I00CAB0BBQNV00BAFJA0 | SRN0120401S | KCNCDHD5329 | 409,6 | 268,1 | 17,6 |
| DN 65 | 2" 1/2 | PN 16 | SM410E00CAB0BBQNV00BAFJA0 | SRN0120401S | KCNDDHD5319 | 409,6 | 284,1 | 24,3 |
| DN 65 | 2" 1/2 | PN 25-40 | SM410I00CAB0BBQNV00BAFKA0 | SRN0180401S | KCNDDHD5319 | 474,0 | 291,0 | 26,1 |
| DN 80 | 3" | PN 16 | SM411E00CAB0BBQNV00BAFKA0 | SRN0180401S | KCNDDHD5319 | 474,0 | 298,0 | 30,2 |
| DN 80 | 3" | PN 25-40 | SM411I00CAB0BBQNV00BAFLA0 | SRN0240401S | KCNDEHD5330 | 520,5 | 335,0 | 33,8 |
| DN 100 | 4" | PN 16 | SM412E00CAB0BBQNV00BAFMA0 | SRN0360401S | KCNEFHD5332 | 613,0 | 365,0 | 59,5 |
| DN 100 | 4" | PN 25-40 | SM412I00CAB0BBQNV00BAFNA0 | SRN0480401S | KCNEFHD5333 | 648,2 | 385,0 | 66,3 |
| DN 125 | 5" | PN 16 | SM413E00CAB0BBQNV00BAFNA0 | SRN0480401S | KCNEFHD5333 | 648,2 | 395,0 | 74,0 |
| DN 125 | 5" | PN 25-40 | SM413I00CAB0BBQNV00BAFQA0 | SRN0720401S | KCNEGHD5356 | 798,0 | 421,0 | 94,5 |
| DN 150 | 6" | PN 16 | SM414E00CAB0BBQNV00BAFQA0 | SRN0720401S | KCNGGHD5368 | 798,0 | 470,0 | 147,4 |
| DN 150 | 6" | PN 25-40 | SM414I00CAB0BBMNV00BAFVA0 | SR1920E1608A | KCNGHHD5349 | 1001,0 | 568,5 | 185,4 |
| DN 200 | 8" | PN 16 | SM415E00CAB0BBQNV00BAFSA0 | SR1440E16D8A | KCNGHHD5370 | 834,0 | 647,0 | 272,0 |
| DN 200 | 8" | PN 25 | SM415H00CAB0BBQNV00BAFSA0 | SR1440E16D8A | KCNGHHD5370 | 834,0 | 647,0 | 276,7 |
| DN 200 | 8" | PN 40 | SM415J00CAB0BBMNV00BAFWA0 | SR2880E16D8A | KCNGHHD5367 | 1201,0 | 654,0 | 343,3 |

### CODICI ARTICOLI IN LF2 ACCIAIO AL CARBONIO *ITEM CODES IN LF2 CARBON STEEL*

| MISURA *SIZE* DN [mm] | [inch] | PN | CODICE ARTICOLO *ITEM CODE* | ATTUATORE *ACTUATOR* | KIT di montaggio *Mounting KIT* | N [mm] | H [mm] | Peso Kg *Weight Kg* |
|---|---|---|---|---|---|---|---|---|
| DN 15 | 1/2" | PN 16 | SM404E00CBB0BAQNV00BAFCA0 | SRN0015401S | KCNAAHD5312 | 233,2 | 161,2 | 3,7 |
| DN 15 | 1/2" | PN 25-40 | SM404I00CBB0BAQNV00BAFEA0 | SRN0030402S | KCNACHD5324 | 258,8 | 182,4 | 4,6 |
| DN 20 | 3/4" | PN 16-40 | SM405F00CBB0BAQNV00BAFEA0 | SRN0030402S | KCNACHD5324 | 258,8 | 185,4 | 4,9 |
| DN 25 | 1" | PN 16-40 | SM406F00CBB0BAQNV00BAFEA0 | SRN0030402S | KCNBCHD5327 | 258,8 | 192,4 | 6,1 |
| DN 32 | 1" 1/4 | PN 16-40 | SM407F00CBB0BAQNV00BAFGA0 | SRN0053401S | KCNBCHD5328 | 304,2 | 210,3 | 8,9 |
| DN 40 | 1" 1/2 | PN 16-40 | SM408F00CBB0BAQNV00BAFHA0 | SRN0060401S | KCNCCHD5317 | 338,5 | 225,0 | 11,6 |
| DN 50 | 2" | PN 16 | SM409E00CBB0BAQNV00BAFIA0 | SRN0090401S | KCNCDHD5329 | 393,7 | 264,5 | 16,7 |
| DN 50 | 2" | PN 25-40 | SM409I00CBB0BAQNV00BAFJA0 | SRN0120401S | KCNCDHD5329 | 409,6 | 268,1 | 17,6 |
| DN 65 | 2" 1/2 | PN 16 | SM410E00CBB0BAQNV00BAFJA0 | SRN0120401S | KCNDDHD5319 | 409,6 | 284,1 | 24,3 |
| DN 65 | 2" 1/2 | PN 25-40 | SM410I00CBB0BAQNV00BAFKA0 | SRN0180401S | KCNDDHD5319 | 474,0 | 291,0 | 26,1 |
| DN 80 | 3" | PN 16 | SM411E00CBB0BAQNV00BAFKA0 | SRN0180401S | KCNDDHD5319 | 474,0 | 298,0 | 30,2 |
| DN 80 | 3" | PN 25-40 | SM411I00CBB0BAQNV00BAFLA0 | SRN0240401S | KCNDEHD5330 | 520,5 | 335,0 | 33,8 |
| DN 100 | 4" | PN 16 | SM412E00CBB0BAQNV00BAFMA0 | SRN0360401S | KCNEFHD5332 | 613,0 | 365,0 | 59,5 |
| DN 100 | 4" | PN 25-40 | SM412I00CBB0BAQNV00BAFNA0 | SRN0480401S | KCNEFHD5333 | 648,2 | 385,0 | 66,3 |
| DN 125 | 5" | PN 16 | SM413E00CBB0BAQNV00BAFNA0 | SRN0480401S | KCNEFHD5333 | 648,2 | 395,0 | 74,0 |
| DN 125 | 5" | PN 25-40 | SM413I00CBB0BAQNV00BAFQA0 | SRN0720401S | KCNEGHD5356 | 798,0 | 421,0 | 94,5 |
| DN 150 | 6" | PN 16 | SM414E00CBB0BAQNV00BAFQA0 | SRN0720401S | KCNGGHD5368 | 798,0 | 470,0 | 147,4 |
| DN 150 | 6" | PN 25-40 | SM414I00CBB0BAMNV00BAFVA0 | SR1920E1608A | KCNGHHD5349 | 1001,0 | 568,5 | 185,4 |
| DN 200 | 8" | PN 16 | SM415E00CBB0BAQNV00BAFSA0 | SR1440E16D8A | KCNGHHD5370 | 834,0 | 647,0 | 272,0 |
| DN 200 | 8" | PN 25 | SM415H00CBB0BAQNV00BAFSA0 | SR1440E16D8A | KCNGHHD5370 | 834,0 | 647,0 | 276,7 |
| DN 200 | 8" | PN 40 | SM415J00CBB0BAMNV00BAFWA0 | SR2880E16D8A | KCNGHHD5367 | 1201,0 | 654,0 | 343,3 |

# MAGNUM SPLIT WAFER - ANSI 150-300
## ACCIAIO AL CARBONIO *CARBON STEEL*
## CON ATTUATORE PNEUMATICO SR *WITH SR PNEUMATIC ACTUATOR*

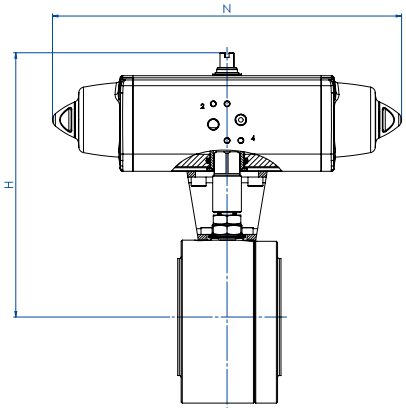


### CODICI ARTICOLI IN A105 ACCIAIO AL CARBONIO *ITEM CODES IN A105 CARBON STEEL*

| MISURA *SIZE* DN [mm] | [inch] | ANSI | CODICE ARTICOLO *ITEM CODE* | ATTUATORE *ACTUATOR* | KIT di montaggio *Mounting KIT* | N [mm] | H [mm] | Peso Kg *Weight Kg* |
|---|---|---|---|---|---|---|---|---|
| DN 15 | 1/2" | ANSI 150 | SM404101CAB0BBQNV00BAFCA0 | SRN0015401S | KCNAAHD5312 | 233,2 | 161,2 | 3,7 |
| DN 15 | 1/2" | ANSI 300 | SM404201CAB0BBQNV00BAFEA0 | SRN0030402S | KCNACHD5325 | 258,8 | 184,4 | 4,6 |
| DN 20 | 3/4" | ANSI 150 | SM405101CAB0BBQNV00BAFEA0 | SRN0030402S | KCNACHD5324 | 258,8 | 185,4 | 4,9 |
| DN 20 | 3/4" | ANSI 300 | SM405201CAB0BBQNV00BAFEA0 | SRN0030402S | KCNACHD5326 | 258,8 | 190,4 | 5,6 |
| DN 25 | 1" | ANSI 150 | SM406101CAB0BBQNV00BAFEA0 | SRN0030402S | KCNBCHD5327 | 258,8 | 192,4 | 6,0 |
| DN 25 | 1" | ANSI 300 | SM406201CAB0BBQNV00BAFEA0 | SRN0030402S | KCNBCHD5250 | 258,8 | 195,4 | 6,4 |
| DN 32 | 1" 1/4 | ANSI 150 | SM407101CAB0BBQNV00BAFGA0 | SRN0053401S | KCNBCHD5328 | 304,2 | 210,3 | 8,9 |
| DN 32 | 1" 1/4 | ANSI 300 | SM407201CAB0BBQNV00BAFGA0 | SRN0053401S | KCNBCHD5328 | 304,2 | 210,3 | 8,9 |
| DN 40 | 1" 1/2 | ANSI 150 | SM408101CAB0BBQNV00BAFHA0 | SRN0060401S | KCNCCHD5317 | 338,5 | 225,0 | 11,6 |
| DN 40 | 1" 1/2 | ANSI 300 | SM408201CAB0BBQNV00BAFHA0 | SRN0060401S | KCNCCHD5317 | 338,5 | 225,0 | 12,7 |
| DN 50 | 2" | ANSI 150 | SM409101CAB0BBQNV00BAFIA0 | SRN0090401S | KCNCDHD5329 | 393,7 | 264,5 | 16,7 |
| DN 50 | 2" | ANSI 300 | SM409201CAB0BBQNV00BAFJA0 | SRN0120401S | KCNCDHD5268 | 409,6 | 274,1 | 19,1 |
| DN 65 | 2" 1/2 | ANSI 150 | SM410101CAB0BBQNV00BAFJA0 | SRN0120401S | KCNDDHD5319 | 409,6 | 284,1 | 24,4 |
| DN 65 | 2" 1/2 | ANSI 300 | SM410201CAB0BBQNV00BAFKA0 | SRN0180401S | KCNDDHD5320 | 474,0 | 297,0 | 29,3 |
| DN 80 | 3" | ANSI 150 | SM411101CAB0BBQNV00BAFKA0 | SRN0180401S | KCNDDHD5319 | 474,0 | 298,0 | 30,7 |
| DN 80 | 3" | ANSI 300 | SM411201CAB0BBQNV00BAFLA0 | SRN0240401S | KCNDEHD5331 | 520,5 | 341,0 | 37,7 |
| DN 100 | 4" | ANSI 150 | SM412101CAB0BBQNV00BAFMA0 | SRN0360401S | KCNEFHD5332 | 613,0 | 365,0 | 56,8 |
| DN 100 | 4" | ANSI 300 | SM412201CAB0BBQNV00BAFNA0 | SRN0480401S | KCNEFHD5389 | 648,2 | 393,0 | 74,2 |
| DN 125 | 5" | ANSI 150 | SM413101CAB0BBQNV00BAFNA0 | SRN0480401S | KCNEFHD5333 | 648,2 | 395,0 | 74,1 |
| DN 150 | 6" | ANSI 150 | SM414101CAB0BBQNV00BAFQA0 | SRN0720401S | KCNGGHD5368 | 798,0 | 470,0 | 148,4 |
| DN 150 | 6" | ANSI 300 | SM414201CAB0BBMNV00BAFVA0 | SR1920E1608A | KCNGHHD5349 | 1001,0 | 568,5 | 185,9 |
| DN 200 | 8" | ANSI 150 | SM415101CAB0BBQNV00BAFSA0 | SR1440E16D8A | KCNGHHD5370 | 834,0 | 647,0 | 273,9 |

### CODICI ARTICOLI IN LF2 ACCIAIO AL CARBONIO *ITEM CODES IN LF2 CARBON STEEL*

| MISURA *SIZE* DN [mm] | [inch] | ANSI | CODICE ARTICOLO *ITEM CODE* | ATTUATORE *ACTUATOR* | KIT di montaggio *Mounting KIT* | N [mm] | H [mm] | Peso Kg *Weight Kg* |
|---|---|---|---|---|---|---|---|---|
| DN 15 | 1/2" | ANSI 150 | SM404101CBB0BAQNV00BAFCA0 | SRN0015401S | KCNAAHD5312 | 233,2 | 161,2 | 3,7 |
| DN 15 | 1/2" | ANSI 300 | SM404201CBB0BAQNV00BAFEA0 | SRN0030402S | KCNACHD5325 | 258,8 | 184,4 | 4,6 |
| DN 20 | 3/4" | ANSI 150 | SM405101CBB0BAQNV00BAFEA0 | SRN0030402S | KCNACHD5324 | 258,8 | 185,4 | 4,9 |
| DN 20 | 3/4" | ANSI 300 | SM405201CBB0BAQNV00BAFEA0 | SRN0030402S | KCNACHD5326 | 258,8 | 190,4 | 5,6 |
| DN 25 | 1" | ANSI 150 | SM406101CBB0BAQNV00BAFEA0 | SRN0030402S | KCNBCHD5327 | 258,8 | 192,4 | 6,0 |
| DN 25 | 1" | ANSI 300 | SM406201CBB0BAQNV00BAFEA0 | SRN0030402S | KCNBCHD5250 | 258,8 | 195,4 | 6,4 |
| DN 32 | 1" 1/4 | ANSI 150 | SM407101CBB0BAQNV00BAFGA0 | SRN0053401S | KCNBCHD5328 | 304,2 | 210,3 | 8,9 |
| DN 32 | 1" 1/4 | ANSI 300 | SM407201CBB0BAQNV00BAFGA0 | SRN0053401S | KCNBCHD5328 | 304,2 | 210,3 | 8,9 |
| DN 40 | 1" 1/2 | ANSI 150 | SM408101CBB0BAQNV00BAFHA0 | SRN0060401S | KCNCCHD5317 | 338,5 | 225,0 | 11,6 |
| DN 40 | 1" 1/2 | ANSI 300 | SM408201CBB0BAQNV00BAFHA0 | SRN0060401S | KCNCCHD5317 | 338,5 | 225,0 | 12,7 |
| DN 50 | 2" | ANSI 150 | SM409101CBB0BAQNV00BAFIA0 | SRN0090401S | KCNCDHD5329 | 393,7 | 264,5 | 16,7 |
| DN 50 | 2" | ANSI 300 | SM409201CBB0BAQNV00BAFJA0 | SRN0120401S | KCNCDHD5268 | 409,6 | 274,1 | 19,1 |
| DN 65 | 2" 1/2 | ANSI 150 | SM410101CBB0BAQNV00BAFJA0 | SRN0120401S | KCNDDHD5319 | 409,6 | 284,1 | 24,4 |
| DN 65 | 2" 1/2 | ANSI 300 | SM410201CBB0BAQNV00BAFKA0 | SRN0180401S | KCNDDHD5320 | 474,0 | 297,0 | 29,3 |
| DN 80 | 3" | ANSI 150 | SM411101CBB0BAQNV00BAFKA0 | SRN0180401S | KCNDDHD5319 | 474,0 | 298,0 | 30,7 |
| DN 80 | 3" | ANSI 300 | SM411201CBB0BAQNV00BAFLA0 | SRN0240401S | KCNDEHD5331 | 520,5 | 341,0 | 37,7 |
| DN 100 | 4" | ANSI 150 | SM412101CBB0BAQNV00BAFMA0 | SRN0360401S | KCNEFHD5332 | 613,0 | 365,0 | 56,8 |
| DN 100 | 4" | ANSI 300 | SM412201CBB0BAQNV00BAFNA0 | SRN0480401S | KCNEFHD5389 | 648,2 | 393,0 | 74,2 |
| DN 125 | 5" | ANSI 150 | SM413101CBB0BAQNV00BAFNA0 | SRN0480401S | KCNEFHD5333 | 648,2 | 395,0 | 74,1 |
| DN 150 | 6" | ANSI 150 | SM414101CBB0BAQNV00BAFQA0 | SRN0720401S | KCNGGHD5368 | 798,0 | 470,0 | 148,4 |
| DN 150 | 6" | ANSI 300 | SM414201CBB0BAMNV00BAFVA0 | SR1920E1608A | KCNGHHD5349 | 1001,0 | 568,5 | 185,9 |
| DN 200 | 8" | ANSI 150 | SM415101CBB0BAQNV00BAFSA0 | SR1440E16D8A | KCNGHHD5370 | 834,0 | 647,0 | 273,9 |

# MAGNUM SPLIT WAFER - PN 16-40
## ACCIAIO AL CARBONIO *CARBON STEEL*
## CON ATTUATORE ELETTRICO *WITH ELECTRIC ACTUATOR*

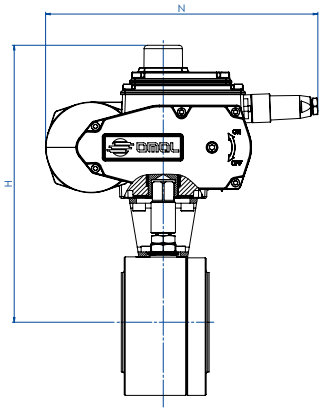


### CODICI ARTICOLI IN A105 ACCIAIO AL CARBONIO *ITEM CODES IN A105 CARBON STEEL*

| MISURA *SIZE* DN [mm] | [inch] | PN | CODICE ARTICOLO *ITEM CODE* | ATTUATORE *ACTUATOR* | KIT di montaggio *Mounting KIT* | N [mm] | H [mm] | Peso Kg *Weight Kg* |
|---|---|---|---|---|---|---|---|---|
| DN 15 | 1/2" | PN 16-40 | EM404F00CAB0BBQNV00BAMEG0 | EA0035A5C000 | KCNACHD5324 | 250,0 | 229,0 | 6,3 |
| DN 20 | 3/4" | PN 16-40 | EM405F00CAB0BBQNV00BAMEG0 | EA0035A5C000 | KCNACHD5324 | 250,0 | 232,0 | 6,6 |
| DN 25 | 1" | PN 16-40 | EM406F00CAB0BBQNV00BAMEG0 | EA0035A5C000 | KCNBCHD5327 | 250,0 | 239,0 | 7,7 |
| DN 32 | 1" 1/4 | PN 16-40 | EM407F00CAB0BBQNV00BAMGG0 | EA0070A5C000 | KCNBCHD5327 | 250,0 | 244,0 | 9,6 |
| DN 40 | 1" 1/2 | PN 16-40 | EM408F00CAB0BBQNV00BAMGG0 | EA0070A5C000 | KCNCCHD5316 | 250,0 | 255,0 | 12,0 |
| DN 50 | 2" | PN 16-40 | EM409F00CAB0BBQNV00BAMIG0 | EA0130A5C000 | KCNCCHD5317 | 280,0 | 284,7 | 17,7 |
| DN 65 | 2" 1/2 | PN 16 | EM410E00CAB0BBQNV00BAMIG0 | EA0130A5C000 | KCNDDHD5318 | 280,0 | 300,5 | 24,8 |
| DN 65 | 2" 1/2 | PN 25-40 | EM410I00CAB0BBQNV00BAMKG0 | EA0240A5C000 | KCNDDHD5319 | 280,0 | 300,5 | 24,7 |
| DN 80 | 3" | PN 16-40 | EM411F00CAB0BBQNV00BAMKG0 | EA0240A5C000 | KCNDDHD5319 | 280,0 | 307,5 | 28,8 |
| DN 100 | 4" | PN 16 | EM412E00CAB0BBQNV00BAMNA0 | AE160040 | KCNEEHV5336 | 256,5 | 372,0 | 51,4 |
| DN 100 | 4" | PN 25-40 | EM412I00CAB0BBQNV00BAMNA0 | AE160040 | KCNEEHV5336 | 256,5 | 372,0 | 51,5 |
| DN 125 | 5" | PN 16 | EM413E00CAB0BBQNV00BAMNA0 | AE160040 | KCNEEHV5336 | 256,5 | 382,0 | 59,2 |
| DN 125 | 5" | PN 25-40 | EM413I00CAB0BBQNV00BAMRA0 | AE160060 | KCNEEHV5362 | 381,0 | 439,0 | 81,9 |
| DN 150 | 6" | PN 16 | EM414E00CAB0BBQNV00BAMTA0 | AE160100 | KCNFGHV5372 | 381,0 | 488,0 | 136,0 |
| DN 150 | 6" | PN 25-40 | EM414I00CAB0BBMNV00BAMXA0 | AE160200 | KCNGGHV5374 | 381,0 | 488,0 | 139,7 |
| DN 200 | 8" | PN 16 | EM415E00CAB0BBQNV00BAMTA0 | AE160100 | KCNFGHV5375 | 381,0 | 522,0 | 218,5 |
| DN 200 | 8" | PN 25 | EM415H00CAB0BBQNV00BAMXA0 | AE160200 | KCNGGHV5376 | 381,0 | 522,0 | 224,8 |
| DN 200 | 8" | PN 40 | EM415J00CAB0BBMNV00BAMXA0 | AE160200 | KCNGGHV5377 | 381,0 | 529,0 | 248,3 |

### CODICI ARTICOLI IN LF2 ACCIAIO AL CARBONIO *ITEM CODES IN LF2 CARBON STEEL*

| MISURA *SIZE* DN [mm] | [inch] | PN | CODICE ARTICOLO *ITEM CODE* | ATTUATORE *ACTUATOR* | KIT di montaggio *Mounting KIT* | N [mm] | H [mm] | Peso Kg *Weight Kg* |
|---|---|---|---|---|---|---|---|---|
| DN 15 | 1/2" | PN 16-40 | EM404F00CBB0BAQNV00BAMEG0 | EA0035A5C000 | KCNACHD5324 | 250,0 | 229,0 | 6,3 |
| DN 20 | 3/4" | PN 16-40 | EM405F00CBB0BAQNV00BAMEG0 | EA0035A5C000 | KCNACHD5324 | 250,0 | 232,0 | 6,6 |
| DN 25 | 1" | PN 16-40 | EM406F00CBB0BAQNV00BAMEG0 | EA0035A5C000 | KCNBCHD5327 | 250,0 | 239,0 | 7,7 |
| DN 32 | 1" 1/4 | PN 16-40 | EM407F00CBB0BAQNV00BAMGG0 | EA0070A5C000 | KCNBCHD5327 | 250,0 | 244,0 | 9,6 |
| DN 40 | 1" 1/2 | PN 16-40 | EM408F00CBB0BAQNV00BAMGG0 | EA0070A5C000 | KCNCCHD5316 | 250,0 | 255,0 | 12,0 |
| DN 50 | 2" | PN 16-40 | EM409F00CBB0BAQNV00BAMIG0 | EA0130A5C000 | KCNCCHD5317 | 280,0 | 284,7 | 17,7 |
| DN 65 | 2" 1/2 | PN 16 | EM410E00CBB0BAQNV00BAMIG0 | EA0130A5C000 | KCNDDHD5318 | 280,0 | 300,5 | 24,8 |
| DN 65 | 2" 1/2 | PN 25-40 | EM410I00CBB0BAQNV00BAMKG0 | EA0240A5C000 | KCNDDHD5319 | 280,0 | 300,5 | 24,7 |
| DN 80 | 3" | PN 16-40 | EM411F00CBB0BAQNV00BAMKG0 | EA0240A5C000 | KCNDDHD5319 | 280,0 | 307,5 | 28,8 |
| DN 100 | 4" | PN 16 | EM412E00CBB0BAQNV00BAMNA0 | AE160040 | KCNEEHV5336 | 256,5 | 372,0 | 51,4 |
| DN 100 | 4" | PN 25-40 | EM412I00CBB0BAQNV00BAMNA0 | AE160040 | KCNEEHV5336 | 256,5 | 372,0 | 51,5 |
| DN 125 | 5" | PN 16 | EM413E00CBB0BAQNV00BAMNA0 | AE160040 | KCNEEHV5336 | 256,5 | 382,0 | 59,2 |
| DN 125 | 5" | PN 25-40 | EM413I00CBB0BAQNV00BAMRA0 | AE160060 | KCNEEHV5362 | 381,0 | 439,0 | 81,9 |
| DN 150 | 6" | PN 16 | EM414E00CBB0BAQNV00BAMTA0 | AE160100 | KCNFGHV5372 | 381,0 | 488,0 | 136,0 |
| DN 150 | 6" | PN 25-40 | EM414I00CBB0BAMNV00BAMXA0 | AE160200 | KCNGGHV5374 | 381,0 | 488,0 | 139,7 |
| DN 200 | 8" | PN 16 | EM415E00CBB0BAQNV00BAMTA0 | AE160100 | KCNFGHV5375 | 381,0 | 522,0 | 218,5 |
| DN 200 | 8" | PN 25 | EM415H00CBB0BAQNV00BAMXA0 | AE160200 | KCNGGHV5376 | 381,0 | 522,0 | 224,8 |
| DN 200 | 8" | PN 40 | EM415J00CBB0BAMNV00BAMXA0 | AE160200 | KCNGGHV5377 | 381,0 | 529,0 | 248,3 |

Articoli disponibili anche con attuatore modulante *Items available also with modulating actuator*

# MAGNUM SPLIT WAFER - ANSI 150-300
## ACCIAIO AL CARBONIO *CARBON STEEL*
## CON ATTUATORE ELETTRICO *WITH ELECTRIC ACTUATOR*

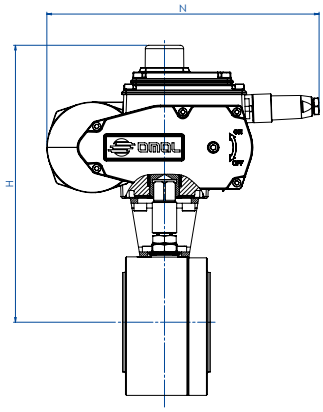


### CODICI ARTICOLI IN A105 ACCIAIO AL CARBONIO *ITEM CODES IN A105 CARBON STEEL*

| MISURA *SIZE* DN [mm] | [inch] | ANSI | CODICE ARTICOLO *ITEM CODE* | ATTUATORE *ACTUATOR* | KIT di montaggio *Mounting KIT* | N [mm] | H [mm] | Peso Kg *Weight Kg* |
|---|---|---|---|---|---|---|---|---|
| DN 15 | 1/2" | ANSI 150 | EM404101CAB0BBQNV00BAMEG0 | EA0035A5C000 | KCNACHD5324 | 250,0 | 229,0 | 6,3 |
| DN 15 | 1/2" | ANSI 300 | EM404201CAB0BBQNV00BAMEG0 | EA0035A5C000 | KCNACHD5325 | 250,0 | 231,0 | 6,3 |
| DN 20 | 3/4" | ANSI 150 | EM405101CAB0BBQNV00BAMEG0 | EA0035A5C000 | KCNACHD5324 | 250,0 | 232,0 | 6,7 |
| DN 20 | 3/4" | ANSI 300 | EM405201CAB0BBQNV00BAMEG0 | EA0035A5C000 | KCNACHD5326 | 250,0 | 237,0 | 7,3 |
| DN 25 | 1" | ANSI 150 | EM406101CAB0BBQNV00BAMEG0 | EA0035A5C000 | KCNBCHD5327 | 250,0 | 239,0 | 7,6 |
| DN 25 | 1" | ANSI 300 | EM406201CAB0BBQNV00BAMEG0 | EA0035A5C000 | KCNBCHD5250 | 250,0 | 242,0 | 8,1 |
| DN 32 | 1" 1/4 | ANSI 150 | EM407101CAB0BBQNV00BAMGG0 | EA0070A5C000 | KCNBCHD5327 | 250,0 | 244,0 | 9,6 |
| DN 32 | 1" 1/4 | ANSI 300 | EM407201CAB0BBQNV00BAMGG0 | EA0070A5C000 | KCNBCHD5327 | 250,0 | 244,0 | 9,6 |
| DN 40 | 1" 1/2 | ANSI 150 | EM408101CAB0BBQNV00BAMGG0 | EA0070A5C000 | KCNCCHD5316 | 250,0 | 255,0 | 12,0 |
| DN 40 | 1" 1/2 | ANSI 300 | EM408201CAB0BBQNV00BAMGG0 | EA0070A5C000 | KCNCCHD5316 | 250,0 | 255,0 | 13,1 |
| DN 50 | 2" | ANSI 150 | EM409101CAB0BBQNV00BAMIG0 | EA0130A5C000 | KCNCCHD5317 | 280,0 | 284,5 | 17,7 |
| DN 50 | 2" | ANSI 300 | EM409201CAB0BBQNV00BAMIG0 | EA0130A5C000 | KCNCCHD5267 | 280,0 | 290,5 | 19,2 |
| DN 65 | 2" 1/2 | ANSI 150 | EM410101CAB0BBQNV00BAMIG0 | EA0130A5C000 | KCNDDHD5318 | 280,0 | 300,5 | 24,6 |
| DN 65 | 2" 1/2 | ANSI 300 | EM410201CAB0BBQNV00BAMKG0 | EA0240A5C000 | KCNDDHD5320 | 280,0 | 306,5 | 27,9 |
| DN 80 | 3" | ANSI 150 | EM411101CAB0BBQNV00BAMKG0 | EA0240A5C000 | KCNDDHD5319 | 280,0 | 307,5 | 29,3 |
| DN 80 | 3" | ANSI 300 | EM411201CAB0BBQNV00BAMKG0 | EA0240A5C000 | KCNDDHD5320 | 280,0 | 313,5 | 33,2 |
| DN 100 | 4" | ANSI 150 | EM412101CAB0BBQNV00BAMNA0 | AE160040 | KCNEEHV5336 | 256,5 | 372,0 | 51,7 |
| DN 100 | 4" | ANSI 300 | EM412201CAB0BBQNV00BAMNA0 | AE160040 | KCNEEHV5361 | 256,5 | 380,0 | 59,3 |
| DN 125 | 5" | ANSI 150 | EM413101CAB0BBQNV00BAMNA0 | AE160040 | KCNEEHV5336 | 256,5 | 382,0 | 59,3 |
| DN 150 | 6" | ANSI 150 | EM414101CAB0BBQNV00BAMTA0 | AE160100 | KCNFGHV5372 | 381,0 | 488,0 | 137,0 |
| DN 150 | 6" | ANSI 300 | EM414201CAB0BBMNV00BAMXA0 | AE160200 | KCNGGHV5374 | 381,0 | 488,0 | 140,2 |
| DN 200 | 8" | ANSI 150 | EM415101CAB0BBQNV00BAMTA0 | AE160100 | KCNFGHV5375 | 381,0 | 522,0 | 220,4 |

### CODICI ARTICOLI IN LF2 ACCIAIO AL CARBONIO *ITEM CODES IN LF2 CARBON STEEL*

| MISURA *SIZE* DN [mm] | [inch] | ANSI | CODICE ARTICOLO *ITEM CODE* | ATTUATORE *ACTUATOR* | KIT di montaggio *Mounting KIT* | N [mm] | H [mm] | Peso Kg *Weight Kg* |
|---|---|---|---|---|---|---|---|---|
| DN 15 | 1/2" | ANSI 150 | EM404101CBB0BAQNV00BAMEG0 | EA0035A5C000 | KCNACHD5324 | 250,0 | 229,0 | 6,3 |
| DN 15 | 1/2" | ANSI 300 | EM404201CBB0BAQNV00BAMEG0 | EA0035A5C000 | KCNACHD5325 | 250,0 | 231,0 | 6,3 |
| DN 20 | 3/4" | ANSI 150 | EM405101CBB0BAQNV00BAMEG0 | EA0035A5C000 | KCNACHD5324 | 250,0 | 232,0 | 6,7 |
| DN 20 | 3/4" | ANSI 300 | EM405201CBB0BAQNV00BAMEG0 | EA0035A5C000 | KCNACHD5326 | 250,0 | 237,0 | 7,3 |
| DN 25 | 1" | ANSI 150 | EM406101CBB0BAQNV00BAMEG0 | EA0035A5C000 | KCNBCHD5327 | 250,0 | 239,0 | 7,6 |
| DN 25 | 1" | ANSI 300 | EM406201CBB0BAQNV00BAMEG0 | EA0035A5C000 | KCNBCHD5250 | 250,0 | 242,0 | 8,1 |
| DN 32 | 1" 1/4 | ANSI 150 | EM407101CBB0BAQNV00BAMGG0 | EA0070A5C000 | KCNBCHD5327 | 250,0 | 244,0 | 9,6 |
| DN 32 | 1" 1/4 | ANSI 300 | EM407201CBB0BAQNV00BAMGG0 | EA0070A5C000 | KCNBCHD5327 | 250,0 | 244,0 | 9,6 |
| DN 40 | 1" 1/2 | ANSI 150 | EM408101CBB0BAQNV00BAMGG0 | EA0070A5C000 | KCNCCHD5316 | 250,0 | 255,0 | 12,0 |
| DN 40 | 1" 1/2 | ANSI 300 | EM408201CBB0BAQNV00BAMGG0 | EA0070A5C000 | KCNCCHD5316 | 250,0 | 255,0 | 13,1 |
| DN 50 | 2" | ANSI 150 | EM409101CBB0BAQNV00BAMIG0 | EA0130A5C000 | KCNCCHD5317 | 280,0 | 284,5 | 17,7 |
| DN 50 | 2" | ANSI 300 | EM409201CBB0BAQNV00BAMIG0 | EA0130A5C000 | KCNCCHD5267 | 280,0 | 290,5 | 19,2 |
| DN 65 | 2" 1/2 | ANSI 150 | EM410101CBB0BAQNV00BAMIG0 | EA0130A5C000 | KCNDDHD5318 | 280,0 | 300,5 | 24,6 |
| DN 65 | 2" 1/2 | ANSI 300 | EM410201CBB0BAQNV00BAMKG0 | EA0240A5C000 | KCNDDHD5320 | 280,0 | 306,5 | 27,9 |
| DN 80 | 3" | ANSI 150 | EM411101CBB0BAQNV00BAMKG0 | EA0240A5C000 | KCNDDHD5319 | 280,0 | 307,5 | 29,3 |
| DN 80 | 3" | ANSI 300 | EM411201CBB0BAQNV00BAMKG0 | EA0240A5C000 | KCNDDHD5320 | 280,0 | 313,5 | 33,2 |
| DN 100 | 4" | ANSI 150 | EM412101CBB0BAQNV00BAMNA0 | AE160040 | KCNEEHV5336 | 256,5 | 372,0 | 51,7 |
| DN 100 | 4" | ANSI 300 | EM412201CBB0BAQNV00BAMNA0 | AE160040 | KCNEEHV5361 | 256,5 | 380,0 | 59,3 |
| DN 125 | 5" | ANSI 150 | EM413101CBB0BAQNV00BAMNA0 | AE160040 | KCNEEHV5336 | 256,5 | 382,0 | 59,3 |
| DN 150 | 6" | ANSI 150 | EM414101CBB0BAQNV00BAMTA0 | AE160100 | KCNFGHV5372 | 381,0 | 488,0 | 137,0 |
| DN 150 | 6" | ANSI 300 | EM414201CBB0BAMNV00BAMXA0 | AE160200 | KCNGGHV5374 | 381,0 | 488,0 | 140,2 |
| DN 200 | 8" | ANSI 150 | EM415101CBB0BAQNV00BAMTA0 | AE160100 | KCNFGHV5375 | 381,0 | 522,0 | 220,4 |

Articoli disponibili anche con attuatore modulante *Items available also with modulating actuator*

# MAGNUM SPLIT WAFER PN 16-40 ANSI 150-300 ACCIAIO INOX *STAINLESS STEEL*

## ESECUZIONE STANDARD

- Sfera flottante contenuta, passaggio totale.
- Tenuta soft-seat PTFE Modificato.
- Norme per flange d'attacco EN 1092-1; ASME B16.5.
- Temperatura di utilizzo vedi diagramma pressione temperatura.
- Classe di pressione: PN16-40; ANSI 150-300.
- Classe di tenuta: EN12266-1 rate A.
- Fluido intercettato: aria, acqua, gas, prodotti petroliferi e petrolchimici, fluidi aggressivi.
- Antistatic device EN12266-2.
- Tenuta stelo: pacco a V di serie in PTFE Modificato.
- Tenuta addizionale su stelo con O-ring FKM.
- Stelo anti Blow-out.
- Foratura piano per attuatore a norma ISO 5211.
- Angolo di chiusura >7°.

## *STANDARD FEATURES*

- *No protuding floating ball, full bore.*
- *Soft-seat seal Modified PTFE.*
- *Standard for connecting flanges: EN 1092-1 ed. 2008; ASME B16.5.*
- *Operating temperature see temperature pressure diagram.*
- *Pressure class: PN16-40 - ANSI 150-300.*
- *Tightness Class: EN12266-1 rate A.*
- *Intercepted fluid: air, water, gas, petroleum and petrochemical products, aggressive fluids.*
- *Antistatic device EN12266-2 .*
- *Stem seal: Modified PTFE V-pack.*
- *Additional seal on stem with FKM O-ring.*
- *Anti Blow-out stem.*
- *Actuator connection as per standard ISO 5211.*
- *Closing angle >7°.*

## ESECUZIONI A RICHIESTA

- Per altri tipi di flangiature contattare il nostro ufficio commerciale.
- Guarnizioni di tenuta in: PTFE caricato vetro (PTFE-GF), PTFE caricato carbografite (PTFE-CF). Per altri tipi di materiale contattare il nostro ufficio commerciale.
- Esecuzione monodirezionale con foro di compensazione della pressione nella sfera.
- Leva inox.
- Dadi e molle stelo inox.
- Per esecuzioni con materiali (corpo/sfera/stelo) diversi dallo standard contattare il nostro ufficio commerciale.
- Marcatura e certificato ATEX **A RICHIESTA.**

## *FEATURES ON REQUEST*

- *For other flange types please contact our sales department.*
- *Sealing in: PTFE reinforced with glass (PTFE-GF), PTFE reinforced with carbon-graphite* (PTFE-CF). *For other types of materials please contact our sales department.*
- *Mono-directional version with pressure-relief hole in the ball.*
- *Stainless steel lever.*
- *Stainless steel Stem nuts and springs.*
- *For versions in materials different from the standard (body, ball, stem), please contact our sales department.*
- *ATEX marking and certificate **ON REQUEST.***

## CERTIFICAZIONI

- Conforme alla direttiva Europea 2014/68/UE PED; Fugitive Emission ISO 15848 (ISO FE BH-C03-SSA 0); TA-LUFT VDI 2440; FIRE SAFE: ISO 10497 Third ed. 2010 / API 607 Sixth ed. 2010.
- Livello di sicurezza funzionale fino a SIL 3 in accordo a IEC 61508.
- Conforme alla direttiva ATEX 2014/34/UE, certificato ATEX **A RICHIESTA.**

## *CERTIFICATIONS*

- *In compliance with European Directive 2014/68/EU PED; Fugitive Emission ISO 15848 (ISO FE BH-C03-SSA 0); TA-LUFT VDI 2440; FIRE SAFE: ISO 10497 Third ed. 2010 / API 607 Sixth ed. 2010.*
- *Safety integrity level up to SIL 3 according to the IEC 61508.*
- *In compliance with ATEX 2014/34/EU Directive , ATEX certificate **ON REQUEST.***

## NORME DI PROGETTAZIONE

- Spessori corpo in accordo a: ASME B16.34, ASME VIII div.1, EN 12516.
- Materiali e rating in accordo ad ASME B16.34 per valvole ANSI ed EN 12516 per valvole PN.

## *ENGINEERING STANDARDS*

- *Body thickness in compliance with: ASME B16.34, ASME VIII div.1, EN 12516.*
- *Materials and rating in compliance with ASME B16.34 for ANSI valves and EN 12516 for PN valves.*

# MAGNUM SPLIT WAFER - PN 16-40 ANSI 150-300
## ACCIAIO INOX *STAINLESS STEEL*
## TABELLA DEI MATERIALI *MATERIALS TABLE*

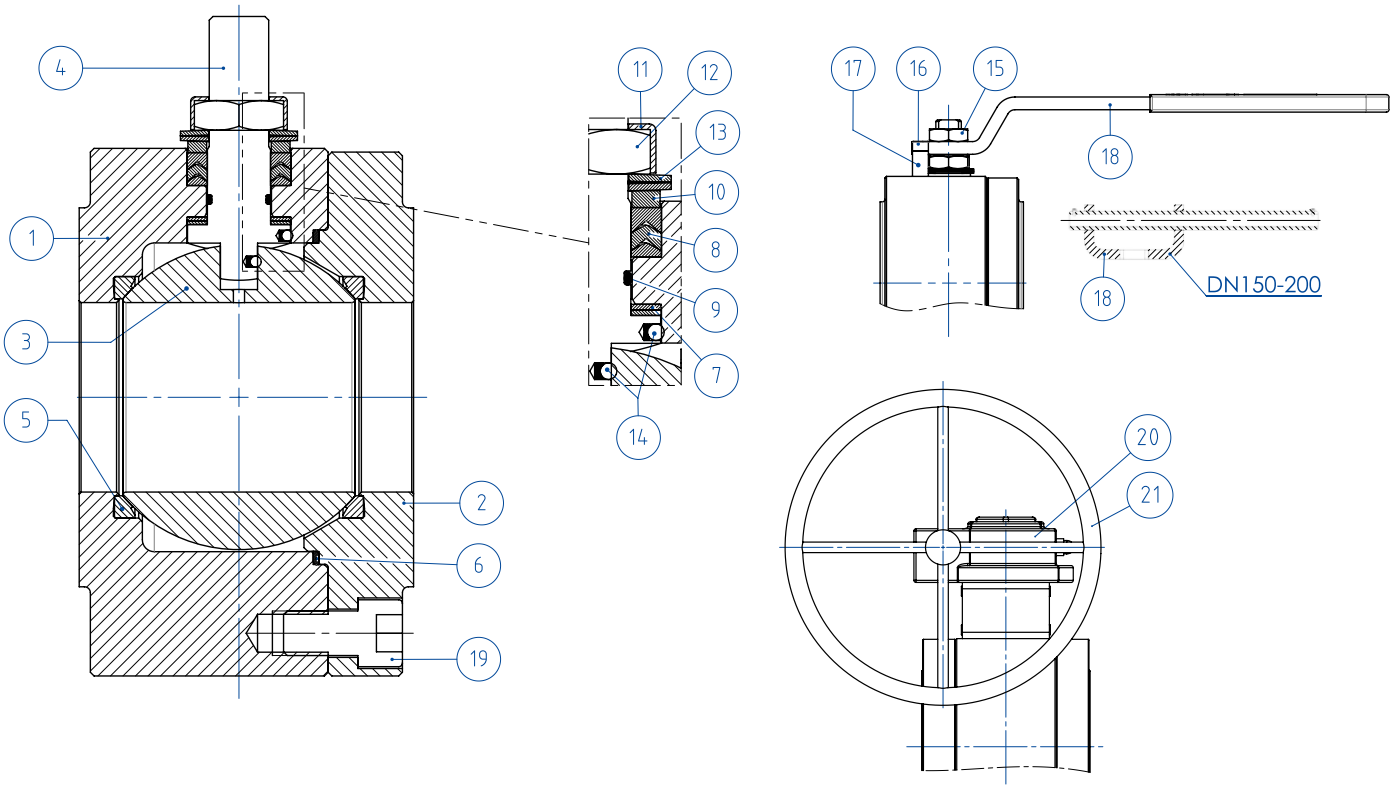


| MATERIALI *MATERIALS*<br>SPLIT WAFER PN16-40 ANSI 150-300 acciaio inox *stainless steel* | | |
|---|---|---|
| **N°** | **Descrizione *Description*** | **316 *Stainless steel*** |
| 1 | Corpo *Body* | ASTM A182 F316 / A479TP.316 (x)<br>(1.4401 / X5CrNiMo17-12-2) |
| 2 | Ghiera *Ring nut* | |
| 3 | Sfera *Ball* | ASTM A351 CF8M<br>(1.4408/GX5CrNiMo19-12-2) |
| 4 | Stelo *Stem* | A564 TP.630 (17-4PH) |
| 5* | Seggio *Seat* | PTFE Modificato *Modified PTFE* (.) (2) |
| 6* | Guarnizione corpo ghiera *Body-ring nut gasket* | GRAFOIL |
| 7* | Tenuta inferiore stelo *Stem lower sealing* | PTFE Modificato *Modified PTFE* (.) |
| 8* | Pacco a V *Chevron rings* | PTFE Modificato *Modified PTFE* (.) |
| 9* | O-ring stelo *Stem o-ring* | FKM (.) |
| 10 | Anello premiguarnizione *Packing gland ring* | 304 S.S. |
| 11 | Piastra blocca dado *Stop nut plate* | 304 S.S. |
| 12 | Dado stelo *Stem nut* | Acciaio al carbonio zincato *Carbon steel galvanized* (x) |
| 13 | Molle a tazza *Springs washer* | Acciaio al carbonio zincato *Carbon steel galvanized* (xx) |
| 14 | Dispositivo antistatico *Antistatic device* | 316 S.S. |
| 15 | Controdado *Lock nut* | Acciaio al carbonio zincato *Carbon steel galvanized* (x) |
| 16 | Vite di fermo *Holder screw* | A2-70 (304 S.S.) |
| 17 | Fermo di posizione *Holder screw* | Acciaio al carbonio zincato *Carbon steel galvanized* (x) |
| 18 | Leva *Lever* | Fe37 zincato - *Galvanized* (x) |
| 19 | Vite corpo-ghiera *Body-ring nut screw* | A2.70 (304 S.S) |
| 20 | Riduttore *Gear box* | Ghisa (verniciato) *Cast iron (painted)* |
| 21 | Volantino *Handwheel* | Acciaio al carbonio Verniciato *Carbon steel painted* |
| * Componenti del kit di guarnizioni *Components of seals kit* | | |

A richiesta disponibile in: *Available on request:*

(x): 304 s.s.
(xx): 301 s.s.
(2) DEVLON per DN150 PN25-40 - ANSI300, DN200 PN40
*(2) DEVLON for DN150 PN25-40 - ANSI300, DN200 PN40*

(.): Altri materiali disponibili a richiesta *Other materials available on request*

# MAGNUM SPLIT WAFER - PN 16-40 ANSI 150-300
## ACCIAIO INOX *STAINLESS STEEL*
## ASSE LIBERO - CON LEVA - CON RIDUTTORE *FREE SHAFT - WITH LEVER - WITH GEARBOX*

### CODICI VALVOLE IN ACCIAIO INOX: ASSE LIBERO (V__) - CON LEVA (L__) - CON RIDUTTORE (R__) -PN-
### *STAINLESS STEEL VALVE CODE: FREE SHAFT (V__) - WITH LEVER (L__) - WITH GEARBOX (R__) -PN-*

| MISURA *SIZE* DN [mm] | [inch] | PN | 316 *Stainless steel* |
|---|---|---|---|
| DN 15 | 1/2" | PN 16-40 | V/LM404F00ABA0AAQNV000 |
| DN 20 | 3/4" | PN 16-40 | V/LM405F00ABA0AAQNV000 |
| DN 25 | 1" | PN 16-40 | V/LM406F00ABA0AAQNV000 |
| DN 32 | 1" 1/4 | PN 16-40 | V/LM407F00ABA0AAQNV000 |
| DN 40 | 1" 1/2 | PN 16-40 | V/LM408F00ABA0AAQNV000 |
| DN 50 | 2" | PN 16-40 | V/LM409F00ABA0AAQNV000 |
| DN 65 | 2" 1/2 | PN16 | V/LM410E00ABA0AAQNV000 |
| DN 65 | 2" 1/2 | PN25-40 | V/LM410I00ABA0AAQNV000 |
| DN 80 | 3" | PN 16-40 | V/LM411F00ABA0AAQNV000 |
| DN 100 | 4" | PN16 | V/LM412E00ABA0AAQNV000 |
| DN 100 | 4" | PN 25-40 | V/LM412I00ABA0AAQNV000 |
| DN 125 | 5" | PN 16 | V/LM413E00ABA0AAQNV000 |
| DN 125 | 5" | PN 25-40 | V/LM413I00ABA0AAQNV000 |
| DN150(*) | 6" | PN 16 | V/RM414E00ABA0AAQNV000 |
| DN150 | 6" | PN 25-40 | V/RM414I00ABA0AAMNV000 |
| DN200(*) | 8" | PN 16 | V/RM415E00ABA0AAQNV000 |
| DN200(*) | 8" | PN 25 | V/RM415H00ABA0AAQNV000 |
| DN200 | 8" | PN 40 | V/RM415J00ABA0AAMNV000 |

### CODICI VALVOLE IN ACCIAIO INOX: ASSE LIBERO (V__) - CON LEVA (L__) - CON RIDUTTORE (R__) -ANSI-
### *STAINLESS STEEL VALVE CODE: FREE SHAFT (V__) - WITH LEVER (L__) - WITH GEARBOX (R__) -ANSI-*

| MISURA *SIZE* DN [mm] | [inch] | ANSI | 316 *Stainless steel* |
|---|---|---|---|
| DN 15 | 1/2" | ANSI 150 | V/LM404101ABA0AAQNV000 |
| DN 15 | 1/2" | ANSI 300 | V/LM404201ABA0AAQNV000 |
| DN 20 | 3/4" | ANSI 150 | V/LM405101ABA0AAQNV000 |
| DN 20 | 3/4" | ANSI 300 | V/LM405201ABA0AAQNV000 |
| DN 25 | 1" | ANSI 150 | V/LM406101ABA0AAQNV000 |
| DN 25 | 1" | ANSI 300 | V/LM406201ABA0AAQNV000 |
| DN 32 | 1" 1/4 | ANSI 150 | V/LM407101ABA0AAQNV000 |
| DN 32 | 1" 1/4 | ANSI 300 | V/LM407201ABA0AAQNV000 |
| DN 40 | 1" 1/2 | ANSI 150 | V/LM408101ABA0AAQNV000 |
| DN 40 | 1" 1/2 | ANSI 300 | V/LM408201ABA0AAQNV000 |
| DN 50 | 2" | ANSI 150 | V/LM409101ABA0AAQNV000 |
| DN 50 | 2" | ANSI 300 | V/LM409201ABA0AAQNV000 |
| DN 65 | 2" 1/2 | ANSI 150 | V/LM410101ABA0AAQNV000 |
| DN 65 | 2" 1/2 | ANSI 300 | V/LM410201ABA0AAQNV000 |
| DN 80 | 3" | ANSI 150 | V/LM411101ABA0AAQNV000 |
| DN 80 | 3" | ANSI 300 | V/LM411201ABA0AAQNV000 |
| DN 100 | 4" | ANSI 150 | V/LM412101ABA0AAQNV000 |
| DN 100 | 4" | ANSI 300 | V/LM412201ABA0AAQNV000 |
| DN 125 | 5" | ANSI 150 | V/LM413101ABA0AAQNV000 |
| DN150(*) | 6" | ANSI 150 | V/RM414101ABA0AAQNV000 |
| DN150 | 6" | ANSI 300 | V/RM414201ABA0AAMNV000 |
| DN200(*) | 8" | ANSI 150 | V/RM415101ABA0AAQNV000 |

DN200 ANSI300 disponibile a magazzino, contattare ufficio commerciale per verifica condizioni operative.
*DN200 ANSI300 on stock, check with our sales department for operating conditions.*

Versione STANDARD con riduttore manuale per DN150 e DN200. *STANDARD version with manual gearbox for DN150 and DN200.*
(*) A RICHIESTA versione con leva. *ON REQUEST version with manual lever.*

# MAGNUM SPLIT WAFER - PN 16-40 ANSI 150-300
## ACCIAIO INOX *STAINLESS STEEL*
## CON ATTUATORE PNEUMATICO DA *WITH DA PNEUMATIC ACTUATOR*

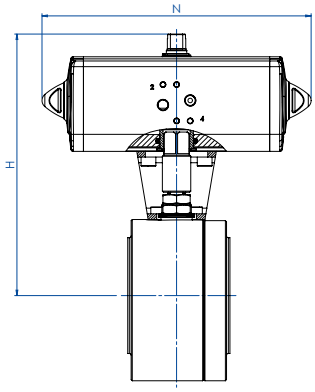


### CODICI ARTICOLI IN 316 ACCIAIO INOX -PN- *ITEM CODES IN 316 STAINLESS STEEL -PN-*

| MISURA *SIZE* DN [mm] | [inch] | PN | CODICE ARTICOLO -316- *ITEM CODE -316-* | ATTUATORE *ACTUATOR* | KIT di montaggio *Mounting KIT* | N [mm] | H [mm] | Peso Kg *Weight Kg* |
|---|---|---|---|---|---|---|---|---|
| DN 15 | 1/2" | PN 16 | DM404E00ABA0AAQNV000AFBA0 | DAN0015411S | KCNAAHD5312 | 159,1 | 154,2 | 3,2 |
| DN 15 | 1/2" | PN 25-40 | DM404I00ABA0AAQNV000AFCA0 | DAN0030411S | KCNAAHD5312 | 174,3 | 161,2 | 3,5 |
| DN 20 | 3/4" | PN 16-40 | DM405F00ABA0AAQNV000AFCA0 | DAN0030411S | KCNAAHD5312 | 174,3 | 164,2 | 3,8 |
| DN 25 | 1" | PN 16-40 | DM406F00ABA0AAQNV000AFCA0 | DAN0030411S | KCNBCHD5315 | 174,3 | 181,2 | 6,0 |
| DN 32 | 1" 1/4 | PN 16-40 | DM407F00ABA0AAQNV000AFDA0 | DAN0045412S | KCNBCHD5315 | 188,5 | 191,5 | 7,0 |
| DN 40 | 1" 1/2 | PN 16-40 | DM408F00ABA0AAQNV000AFEA0 | DAN0060412S | KCNCCHD5316 | 198,1 | 208,4 | 9,8 |
| DN 50 | 2" | PN 16 | DM409E00ABA0AAQNV000AFGA0 | DAN0106411S | KCNCCHD5317 | 237,1 | 230,3 | 13,0 |
| DN 50 | 2" | PN 25-40 | DM409I00ABA0AAQNV000AFHA0 | DAN0120411S | KCNCCHD5317 | 257,4 | 234,0 | 13,1 |
| DN 65 | 2" 1/2 | PN 16 | DM410E00ABA0AAQNV000AFHA0 | DAN0120411S | KCNDDHD5318 | 257,4 | 250,0 | 19,9 |
| DN 65 | 2" 1/2 | PN 25-40 | DM410I00ABA0AAQNV000AFIA0 | DAN0180411S | KCNDDHD5319 | 289,9 | 280,5 | 21,8 |
| DN 80 | 3" | PN 16 | DM411E00ABA0AAQNV000AFIA0 | DAN0180411S | KCNDDHD5319 | 289,9 | 287,5 | 25,9 |
| DN 80 | 3" | PN 25-40 | DM411I00ABA0AAQNV000AFJA0 | DAN0240411S | KCNDDHD5319 | 313,6 | 291,1 | 26,7 |
| DN 100 | 4" | PN 16 | DM412E00ABA0AAQNV000AFKA0 | DAN0360411S | KCNEEHD5321 | 339,3 | 329,0 | 51,7 |
| DN 100 | 4" | PN 25-40 | DM412I00ABA0AAQNV000AFLA0 | DAN0480411S | KCNEFHD5322 | 387,7 | 387,7 | 52,7 |
| DN 125 | 5" | PN 16 | DM413E00ABA0AAQNV000AFLA0 | DAN0480411S | KCNEFHD5332 | 387,7 | 362,0 | 60,4 |
| DN 125 | 5" | PN 25-40 | DM413I00ABA0AAQNV000AFMA0 | DAN0720411S | KCNEFHD5348 | 433,1 | 383,0 | 72,6 |
| DN 150 | 6" | PN 16 | DM414E00ABA0AAQNV000AFMA0 | DAN0720411S | KCNFGHD5364 | 433,1 | 432,0 | 127,0 |
| DN 150 | 6" | PN 25-40 | DM414I00ABA0AAMNV000AFRA0 | DAN1920411S | KCNGGHD5600 | 601,0 | 491,7 | 150,4 |
| DN 200 | 8" | PN 16 | DM415E00ABA0AAQNV000AFQA0 | DAN1440411S | KCNGGHD5366 | 567,1 | 524,0 | 222,0 |
| DN 200 | 8" | PN 25 | DM415H00ABA0AAQNV000AFQA0 | DAN1440411S | KCNGGHD5366 | 567,1 | 524,0 | 224,7 |
| DN 200 | 8" | PN 40 | DM415J00ABA0AAMNV000AFSA0 | DA2880E16D0A | KCNGHHD5367 | 667,0 | 654,0 | 343,3 |

### CODICI ARTICOLI IN 316 ACCIAIO INOX - ANSI- *ITEM CODES IN 316 STAINLESS STEEL - ANSI-*

| MISURA *SIZE* DN [mm] | [inch] | ANSI | CODICE ARTICOLO -316- *ITEM CODE -316-* | ATTUATORE *ACTUATOR* | KIT di montaggio *Mounting KIT* | N [mm] | H [mm] | Peso Kg *Weight Kg* |
|---|---|---|---|---|---|---|---|---|
| DN 15 | 1/2" | ANSI 150 | DM404101ABA0AAQNV000AFBA0 | DAN0015411S | KCNAAHD5312 | 159,0 | 154,2 | 3,2 |
| DN 15 | 1/2" | ANSI 300 | DM404201ABA0AAQNV000AFCA0 | DAN0030411S | KCNAAHD5313 | 174,2 | 163,2 | 3,5 |
| DN 20 | 3/4" | ANSI 150 | DM405101ABA0AAQNV000AFCA0 | DAN0030411S | KCNAAHD5312 | 174,2 | 164,2 | 3,9 |
| DN 20 | 3/4" | ANSI 300 | DM405201ABA0AAQNV000AFCA0 | DAN0030411S | KCNAAHD5314 | 174,2 | 169,2 | 4,5 |
| DN 25 | 1" | ANSI 150 | DM406101ABA0AAQNV000AFCA0 | DAN0030411S | KCNBCHD5315 | 174,2 | 181,2 | 5,0 |
| DN 25 | 1" | ANSI 300 | DM406201ABA0AAQNV000AFCA0 | DAN0030411S | KCNBCHD5249 | 174,2 | 184,2 | 5,4 |
| DN 32 | 1" 1/4 | ANSI 150 | DM407101ABA0AAQNV000AFDA0 | DAN0045412S | KCNBCHD5315 | 188,5 | 191,5 | 7,0 |
| DN 32 | 1" 1/4 | ANSI 300 | DM407201ABA0AAQNV000AFDA0 | DAN0045412S | KCNBCHD5315 | 188,5 | 191,5 | 7,0 |
| DN 40 | 1" 1/2 | ANSI 150 | DM408101ABA0AAQNV000AFEA0 | DAN0060412S | KCNCCHD5316 | 198,0 | 202,5 | 9,8 |
| DN 40 | 1" 1/2 | ANSI 300 | DM408201ABA0AAQNV000AFEA0 | DAN0060412S | KCNCCHD5316 | 198,0 | 208,4 | 10,9 |
| DN 50 | 2" | ANSI 150 | DM409101ABA0AAQNV000AFGA0 | DAN0106411S | KCNCCHD5317 | 237,0 | 230,3 | 13,0 |
| DN 50 | 2" | ANSI 300 | DM409201ABA0AAQNV000AFHA0 | DAN0120411S | KCNCCHD5267 | 244,1 | 240,0 | 14,6 |
| DN 65 | 2" 1/2 | ANSI 150 | DM410101ABA0AAQNV000AFHA0 | DAN0120411S | KCNDDHD5318 | 244,1 | 250,0 | 20,0 |
| DN 65 | 2" 1/2 | ANSI 300 | DM410201ABA0AAQNV000AFIA0 | DAN0180411S | KCNDDHD5320 | 289,9 | 286,5 | 25,0 |
| DN 80 | 3" | ANSI 150 | DM411101ABA0AAQNV000AFIA0 | DAN0180411S | KCNDDHD5319 | 289,9 | 287,5 | 26,4 |
| DN 80 | 3" | ANSI 300 | DM411201ABA0AAQNV000AFJA0 | DAN0240411S | KCNDDHD5320 | 313,6 | 297,1 | 31,1 |
| DN 100 | 4" | ANSI 150 | DM412101ABA0AAQNV000AFKA0 | DAN0360411S | KCNEEHD5321 | 339,3 | 335,0 | 48,9 |
| DN 100 | 4" | ANSI 300 | DM412201ABA0AAQNV000AFLA0 | DAN0480411S | KCNEFHD5348 | 387,6 | 359,9 | 60,5 |
| DN 125 | 5" | ANSI 150 | DM413101ABA0AAQNV000AFLA0 | DAN0480411S | KCNEFHD5332 | 387,6 | 361,9 | 60,5 |
| DN 150 | 6" | ANSI 150 | DM414101ABA0AAQNV000AFMA0 | DAN0720411S | KCNFGHD5364 | 433,1 | 412,0 | 126,7 |
| DN 150 | 6" | ANSI 300 | DM414201ABA0AAMNV000AFRA0 | DAN1920411S | KCNGGHD5600 | 601,0 | 491,7 | 150,9 |
| DN 200 | 8" | ANSI 150 | DM415101ABA0AAQNV000AFQA0 | DAN1440411S | KCNGGHD5366 | 567,1 | 484,0 | 221,9 |

# MAGNUM SPLIT WAFER - PN 16-40 ANSI 150-300
## ACCIAIO INOX *STAINLESS STEEL*
## CON ATTUATORE PNEUMATICO SR *WITH SR PNEUMATIC ACTUATOR*

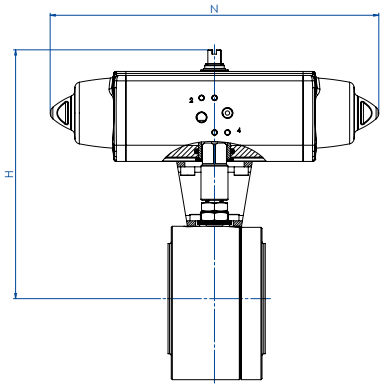


### CODICI ARTICOLI IN 316 ACCIAIO INOX -PN- *ITEM CODES IN 316 STAINLESS STEEL -PN-*

| MISURA *SIZE* DN [mm] | [inch] | PN | CODICE ARTICOLO -316- *ITEM CODE -316-* | ATTUATORE *ACTUATOR* | KIT di montaggio *Mounting KIT* | N [mm] | H [mm] | Peso Kg *Weight Kg* |
|---|---|---|---|---|---|---|---|---|
| DN 15 | 1/2" | PN 16 | SM404E00ABA0AAQNV000AFCA0 | SRN0015401S | KCNAAHD5312 | 233,2 | 161,2 | 3,7 |
| DN 15 | 1/2" | PN 25-40 | SM404I00ABA0AAQNV000AFEA0 | SRN0030402S | KCNACHD5324 | 258,8 | 182,4 | 4,6 |
| DN 20 | 3/4" | PN 16-40 | SM405F00ABA0AAQNV000AFEA0 | SRN0030402S | KCNACHD5324 | 258,8 | 185,4 | 4,9 |
| DN 25 | 1" | PN 16-40 | SM406F00ABA0AAQNV000AFEA0 | SRN0030402S | KCNBCHD5327 | 258,8 | 192,4 | 6,1 |
| DN 32 | 1" 1/4 | PN 16-40 | SM407F00ABA0AAQNV000AFGA0 | SRN0053401S | KCNBCHD5328 | 304,2 | 210,3 | 8,9 |
| DN 40 | 1" 1/2 | PN 16-40 | SM408F00ABA0AAQNV000AFHA0 | SRN0060401S | KCNCCHD5317 | 338,5 | 225,0 | 11,6 |
| DN 50 | 2" | PN 16 | SM409E00ABA0AAQNV000AFIA0 | SRN0090401S | KCNCDHD5329 | 393,7 | 264,5 | 16,7 |
| DN 50 | 2" | PN 25-40 | SM409I00ABA0AAQNV000AFJA0 | SRN0120401S | KCNCDHD5329 | 409,6 | 268,1 | 17,6 |
| DN 65 | 2" 1/2 | PN 16 | SM410E00ABA0AAQNV000AFJA0 | SRN0120401S | KCNDDHD5319 | 409,6 | 284,1 | 24,3 |
| DN 65 | 2" 1/2 | PN 25-40 | SM410I00ABA0AAQNV000AFKA0 | SRN0180401S | KCNDDHD5319 | 474,0 | 291,0 | 26,1 |
| DN 80 | 3" | PN 16 | SM411E00ABA0AAQNV000AFKA0 | SRN0180401S | KCNDDHD5319 | 474,0 | 298,0 | 30,2 |
| DN 80 | 3" | PN 25-40 | SM411I00ABA0AAQNV000AFLA0 | SRN0240401S | KCNDEHD5330 | 520,5 | 335,0 | 33,8 |
| DN 100 | 4" | PN 16 | SM412E00ABA0AAQNV000AFMA0 | SRN0360401S | KCNEFHD5332 | 613,0 | 365,0 | 59,5 |
| DN 100 | 4" | PN 25-40 | SM412I00ABA0AAQNV000AFNA0 | SRN0480401S | KCNEFHD5333 | 648,2 | 385,0 | 66,3 |
| DN 125 | 5" | PN 16 | SM413E00ABA0AAQNV000AFNA0 | SRN0480401S | KCNEFHD5333 | 648,2 | 395,0 | 74,0 |
| DN 125 | 5" | PN 25-40 | SM413I00ABA0AAQNV000AFQA0 | SRN0720401S | KCNEGHD5356 | 798,0 | 421,0 | 94,5 |
| DN 150 | 6" | PN 16 | SM414E00ABA0AAQNV000AFQA0 | SRN0720401S | KCNGGHD5368 | 798,0 | 470,0 | 147,4 |
| DN 150 | 6" | PN 25-40 | SM414I00ABA0AAMNV000AFVA0 | SR1920E1608A | KCNGHHD5349 | 1001,0 | 568,5 | 185,4 |
| DN 200 | 8" | PN 16 | SM415E00ABA0AAQNV000AFSA0 | SR1440E16D8A | KCNGHHD5370 | 834,0 | 647,0 | 272,0 |
| DN 200 | 8" | PN 25 | SM415H00ABA0AAQNV000AFSA0 | SR1440E16D8A | KCNGHHD5370 | 834,0 | 647,0 | 276,7 |
| DN 200 | 8" | PN 40 | SM415J00ABA0AAMNV000AFWA0 | SR2880E16D8A | KCNGHHD5367 | 1201,0 | 654,0 | 343,3 |

### CODICI ARTICOLI IN 316 ACCIAIO INOX -ANSI- *ITEM CODES IN 316 STAINLESS STEEL -ANSI-*

| MISURA *SIZE* DN [mm] | [inch] | ANSI | CODICE ARTICOLO -316- *ITEM CODE -316-* | ATTUATORE *ACTUATOR* | KIT di montaggio *Mounting KIT* | N [mm] | H [mm] | Peso Kg *Weight Kg* |
|---|---|---|---|---|---|---|---|---|
| DN 15 | 1/2" | ANSI 150 | SM404101ABA0AAQNV000AFCA0 | SRN0015401S | KCNAAHD5312 | 233,2 | 161,2 | 3,7 |
| DN 15 | 1/2" | ANSI 300 | SM404201ABA0AAQNV000AFEA0 | SRN0030402S | KCNACHD5325 | 258,8 | 184,4 | 4,6 |
| DN 20 | 3/4" | ANSI 150 | SM405101ABA0AAQNV000AFEA0 | SRN0030402S | KCNACHD5324 | 258,8 | 185,4 | 4,9 |
| DN 20 | 3/4" | ANSI 300 | SM405201ABA0AAQNV000AFEA0 | SRN0030402S | KCNACHD5326 | 258,8 | 190,4 | 5,6 |
| DN 25 | 1" | ANSI 150 | SM406101ABA0AAQNV000AFEA0 | SRN0030402S | KCNBCHD5327 | 258,8 | 192,4 | 6,0 |
| DN 25 | 1" | ANSI 300 | SM406201ABA0AAQNV000AFEA0 | SRN0030402S | KCNBCHD5250 | 258,8 | 195,4 | 6,4 |
| DN 32 | 1" 1/4 | ANSI 150 | SM407101ABA0AAQNV000AFGA0 | SRN0053401S | KCNBCHD5328 | 304,2 | 210,3 | 8,9 |
| DN 32 | 1" 1/4 | ANSI 300 | SM407201ABA0AAQNV000AFGA0 | SRN0053401S | KCNBCHD5328 | 304,2 | 210,3 | 8,9 |
| DN 40 | 1" 1/2 | ANSI 150 | SM408101ABA0AAQNV000AFHA0 | SRN0060401S | KCNCCHD5317 | 338,5 | 225,0 | 11,6 |
| DN 40 | 1" 1/2 | ANSI 300 | SM408201ABA0AAQNV000AFHA0 | SRN0060401S | KCNCCHD5317 | 338,5 | 225,0 | 12,7 |
| DN 50 | 2" | ANSI 150 | SM409101ABA0AAQNV000AFIA0 | SRN0090401S | KCNCDHD5329 | 393,7 | 264,5 | 16,7 |
| DN 50 | 2" | ANSI 300 | SM409201ABA0AAQNV000AFJA0 | SRN0120401S | KCNCDHD5268 | 409,6 | 274,1 | 19,1 |
| DN 65 | 2" 1/2 | ANSI 150 | SM410101ABA0AAQNV000AFJA0 | SRN0120401S | KCNDDHD5319 | 409,6 | 284,1 | 24,4 |
| DN 65 | 2" 1/2 | ANSI 300 | SM410201ABA0AAQNV000AFKA0 | SRN0180401S | KCNDDHD5320 | 474,0 | 297,0 | 29,3 |
| DN 80 | 3" | ANSI 150 | SM411101ABA0AAQNV000AFKA0 | SRN0180401S | KCNDDHD5319 | 474,0 | 298,0 | 30,7 |
| DN 80 | 3" | ANSI 300 | SM411201ABA0AAQNV000AFLA0 | SRN0240401S | KCNDEHD5331 | 520,5 | 341,0 | 37,7 |
| DN 100 | 4" | ANSI 150 | SM412101ABA0AAQNV000AFMA0 | SRN0360401S | KCNEFHD5332 | 613,0 | 365,0 | 56,8 |
| DN 100 | 4" | ANSI 300 | SM412201ABA0AAQNV000AFNA0 | SRN0480401S | KCNEFHD5389 | 648,2 | 393,0 | 74,2 |
| DN 125 | 5" | ANSI 150 | SM413101ABA0AAQNV000AFNA0 | SRN0480401S | KCNEFHD5333 | 648,2 | 395,0 | 74,1 |
| DN 150 | 6" | ANSI 150 | SM414101ABA0AAQNV000AFQA0 | SRN0720401S | KCNGGHD5368 | 798,0 | 470,0 | 148,4 |
| DN 150 | 6" | ANSI 300 | SM414201ABA0AAMNV000AFVA0 | SR1920E1608A | KCNGHHD5349 | 1001,0 | 568,5 | 185,9 |
| DN 200 | 8" | ANSI 150 | SM415101ABA0AAQNV000AFSA0 | SR1440E16D8A | KCNGHHD5370 | 834,0 | 647,0 | 273,9 |

# MAGNUM SPLIT WAFER - PN 16-40 ANSI 150-300
## ACCIAIO INOX *STAINLESS STEEL*
## CON ATTUATORE ELETTRICO *WITH ELECTRIC ACTUATOR*

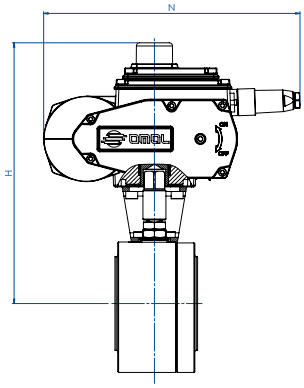


### CODICI ARTICOLI IN 316 ACCIAIO INOX -PN- *ITEM CODES IN 316 STAINLESS STEEL -PN-*

| MISURA *SIZE* DN [mm] | [inch] | PN | CODICE ARTICOLO -316- *ITEM CODE -316-* | ATTUATORE *ACTUATOR* | KIT di montaggio *Mounting KIT* | N [mm] | H [mm] | Peso Kg *Weight Kg* |
|---|---|---|---|---|---|---|---|---|
| DN 15 | 1/2" | PN 16-40 | EM404F00ABA0AAQNV000AMEG0 | EA0035A5C000 | KCNACHD5324 | 250,0 | 229,0 | 6,3 |
| DN 20 | 3/4" | PN 16-40 | EM405F00ABA0AAQNV000AMEG0 | EA0035A5C000 | KCNACHD5324 | 250,0 | 232,0 | 6,6 |
| DN 25 | 1" | PN 16-40 | EM406F00ABA0AAQNV000AMEG0 | EA0035A5C000 | KCNBCHD5327 | 250,0 | 239,0 | 7,7 |
| DN 32 | 1" 1/4 | PN 16-40 | EM407F00ABA0AAQNV000AMGG0 | EA0070A5C000 | KCNBCHD5327 | 250,0 | 244,0 | 9,6 |
| DN 40 | 1" 1/2 | PN 16-40 | EM408F00ABA0AAQNV000AMGG0 | EA0070A5C000 | KCNCCHD5316 | 250,0 | 255,0 | 12,0 |
| DN 50 | 2" | PN 16-40 | EM409F00ABA0AAQNV000AMIG0 | EA0130A5C000 | KCNCCHD5317 | 280,0 | 284,7 | 17,7 |
| DN 65 | 2" 1/2 | PN 16 | EM410E00ABA0AAQNV000AMIG0 | EA0130A5C000 | KCNDDHD5318 | 280,0 | 300,5 | 24,8 |
| DN 65 | 2" 1/2 | PN 25-40 | EM410I00ABA0AAQNV000AMKG0 | EA0240A5C000 | KCNDDHD5319 | 280,0 | 300,5 | 24,7 |
| DN 80 | 3" | PN 16-40 | EM411F00ABA0AAQNV000AMKG0 | EA0240A5C000 | KCNDDHD5319 | 280,0 | 307,5 | 28,8 |
| DN 100 | 4" | PN 16 | EM412E00ABA0AAQNV000AMNA0 | AE160040 | KCNEEHV5336 | 256,5 | 372,0 | 51,4 |
| DN 100 | 4" | PN 25-40 | EM412I00ABA0AAQNV000AMNA0 | AE160040 | KCNEEHV5336 | 256,5 | 372,0 | 51,5 |
| DN 125 | 5" | PN 16 | EM413E00ABA0AAQNV000AMNA0 | AE160040 | KCNEEHV5336 | 256,5 | 382,0 | 59,2 |
| DN 125 | 5" | PN 25-40 | EM413I00ABA0AAQNV000AMRA0 | AE160060 | KCNEEHV5362 | 381,0 | 439,0 | 81,9 |
| DN 150 | 6" | PN 16 | EM414E00ABA0AAQNV000AMTA0 | AE160100 | KCNFGHV5372 | 381,0 | 488,0 | 136,0 |
| DN 150 | 6" | PN 25-40 | EM414I00ABA0AAMNV000AMXA0 | AE160200 | KCNGGHV5374 | 381,0 | 488,0 | 139,7 |
| DN 200 | 8" | PN 16 | EM415E00ABA0AAQNV000AMTA0 | AE160100 | KCNFGHV5375 | 381,0 | 522,0 | 218,5 |
| DN 200 | 8" | PN 25 | EM415H00ABA0AAQNV000AMXA0 | AE160200 | KCNGGHV5376 | 381,0 | 522,0 | 224,8 |
| DN 200 | 8" | PN 40 | EM415J00ABA0AAMNV000AMXA0 | AE160200 | KCNGGHV5377 | 381,0 | 529,0 | 248,3 |

### CODICI ARTICOLI IN 316 ACCIAIO INOX -ANSI- *ITEM CODES IN 316 STAINLESS STEEL -ANSI-*

| MISURA *SIZE* DN [mm] | [inch] | ANSI | CODICE ARTICOLO -316- *ITEM CODE -316-* | ATTUATORE *ACTUATOR* | KIT di montaggio *Mounting KIT* | N [mm] | H [mm] | Peso Kg *Weight Kg* |
|---|---|---|---|---|---|---|---|---|
| DN 15 | 1/2" | ANSI 150 | EM404101ABA0AAQNV000AMEG0 | EA0035A5C000 | KCNACHD5324 | 250,0 | 229,0 | 6,3 |
| DN 15 | 1/2" | ANSI 300 | EM404201ABA0AAQNV000AMEG0 | EA0035A5C000 | KCNACHD5325 | 250,0 | 231,0 | 6,3 |
| DN 20 | 3/4" | ANSI 150 | EM405101ABA0AAQNV000AMEG0 | EA0035A5C000 | KCNACHD5324 | 250,0 | 232,0 | 6,7 |
| DN 20 | 3/4" | ANSI 300 | EM405201ABA0AAQNV000AMEG0 | EA0035A5C000 | KCNACHD5326 | 250,0 | 237,0 | 7,3 |
| DN 25 | 1" | ANSI 150 | EM406101ABA0AAQNV000AMEG0 | EA0035A5C000 | KCNBCHD5327 | 250,0 | 239,0 | 7,6 |
| DN 25 | 1" | ANSI 300 | EM406201ABA0AAQNV000AMEG0 | EA0035A5C000 | KCNBCHD5250 | 250,0 | 242,0 | 8,1 |
| DN 32 | 1" 1/4 | ANSI 150 | EM407101ABA0AAQNV000AMGG0 | EA0070A5C000 | KCNBCHD5327 | 250,0 | 244,0 | 9,6 |
| DN 32 | 1" 1/4 | ANSI 300 | EM407201ABA0AAQNV000AMGG0 | EA0070A5C000 | KCNBCHD5327 | 250,0 | 244,0 | 9,6 |
| DN 40 | 1" 1/2 | ANSI 150 | EM408101ABA0AAQNV000AMGG0 | EA0070A5C000 | KCNCCHD5316 | 250,0 | 255,0 | 12,0 |
| DN 40 | 1" 1/2 | ANSI 300 | EM408201ABA0AAQNV000AMGG0 | EA0070A5C000 | KCNCCHD5316 | 250,0 | 255,0 | 13,1 |
| DN 50 | 2" | ANSI 150 | EM409101ABA0AAQNV000AMIG0 | EA0130A5C000 | KCNCCHD5317 | 280,0 | 284,5 | 17,7 |
| DN 50 | 2" | ANSI 300 | EM409201ABA0AAQNV000AMIG0 | EA0130A5C000 | KCNCCHD5267 | 280,0 | 290,5 | 19,2 |
| DN 65 | 2" 1/2 | ANSI 150 | EM410101ABA0AAQNV000AMIG0 | EA0130A5C000 | KCNDDHD5318 | 280,0 | 300,5 | 24,6 |
| DN 65 | 2" 1/2 | ANSI 300 | EM410201ABA0AAQNV000AMKG0 | EA0240A5C000 | KCNDDHD5320 | 280,0 | 306,5 | 27,9 |
| DN 80 | 3" | ANSI 150 | EM411101ABA0AAQNV000AMKG0 | EA0240A5C000 | KCNDDHD5319 | 280,0 | 307,5 | 29,3 |
| DN 80 | 3" | ANSI 300 | EM411201ABA0AAQNV000AMKG0 | EA0240A5C000 | KCNDDHD5320 | 280,0 | 313,5 | 33,2 |
| DN 100 | 4" | ANSI 150 | EM412101ABA0AAQNV000AMNA0 | AE160040 | KCNEEHV5336 | 256,5 | 372,0 | 51,7 |
| DN 100 | 4" | ANSI 300 | EM412201ABA0AAQNV000AMNA0 | AE160040 | KCNEEHV5361 | 256,5 | 380,0 | 59,3 |
| DN 125 | 5" | ANSI 150 | EM413101ABA0AAQNV000AMNA0 | AE160040 | KCNEEHV5336 | 256,5 | 382,0 | 59,3 |
| DN 150 | 6" | ANSI 150 | EM414101ABA0AAQNV000AMTA0 | AE160100 | KCNFGHV5372 | 381,0 | 488,0 | 137,0 |
| DN 150 | 6" | ANSI 300 | EM414201ABA0AAMNV000AMXA0 | AE160200 | KCNGGHV5374 | 381,0 | 488,0 | 140,2 |
| DN 200 | 8" | ANSI 150 | EM415101ABA0AAQNV000AMTA0 | AE160100 | KCNFGHV5375 | 381,0 | 522,0 | 220,4 |

Articoli disponibili anche con attuatore modulante *Items available also with modulating actuator*

# MAGNUM SPLIT WAFER PN 16-40 ANSI 150-300

## ACCIAIO INOX DA FUSIONE *CASTING STAINLESS STEEL*

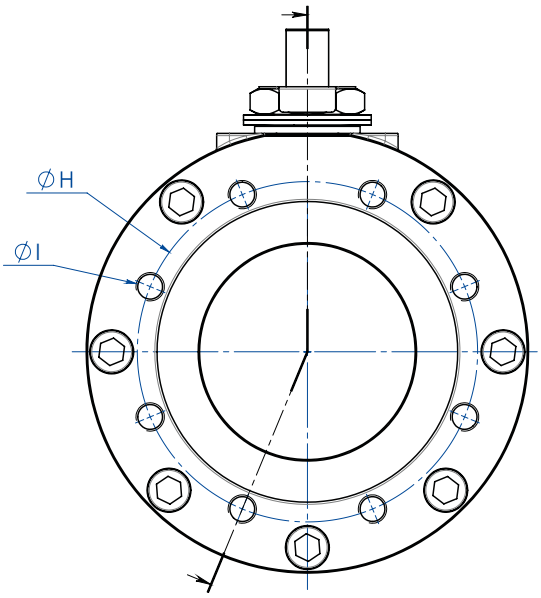


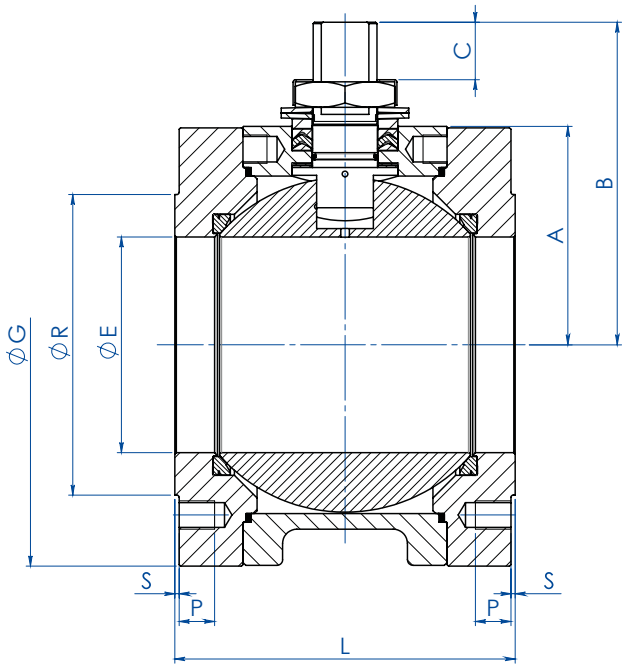


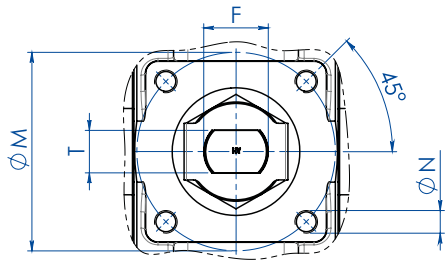


| DIMENSIONI ASSE NUDO *FREE SHAFT DIMENSIONS* PN | | | | | | | | | | | | | | | | | | | | |
|---|---|---|---|---|---|---|---|---|---|---|---|---|---|---|---|---|---|---|---|---|
| MISURA *SIZE* DN [mm] | [inch] | PN | ØE | A | B | C | ØG | ØR | S | ØH | N° FORI *HOLES N°* | ØI | P | F/T | ATT. ISO | ØM | ØN | L | Kg | KIT GUARNIZIONI *SEALS KIT* |
| DN 150 | 6" | PN16 | 152 | 154 | 227,5 | 40,5 | 332 | 212 | 3 | 240 | 8 | M20 | 25 | 45/30 | F14 | 140 | M16 | 240 | 84,4 | KGBV485140 |
| DN 150 | 6" | PN25-40 | 152 | 154 | 227,5 | 40,5 | 332 | 218 | 3 | 250 | 8 | M24 | 24 | 45/30 | F14 | 140 | M16 | 240 | 86,6 | KGBV48514D |
| DN 200 | 8" | PN16 | 188 | 188 | 274 | 44,8 | 396 | 268 | 3 | 295 | 12 | M20 | 30 | 52/35 | F14 | 140 | M16 | 314 | 151,0 | KGBV485150 |
| DN 200 | 8" | PN25 | 203 | 188 | 274 | 44,8 | 396 | 278 | 3 | 310 | 12 | M24 | 30 | 52/35 | F14 | 140 | M16 | 314 | 155,7 | KGBV485150 |

| DIMENSIONI ASSE NUDO *FREE SHAFT DIMENSIONS* ANSI | | | | | | | | | | | | | | | | | | | | |
|---|---|---|---|---|---|---|---|---|---|---|---|---|---|---|---|---|---|---|---|---|
| MISURA *SIZE* DN [mm] | [inch] | ANSI | ØE | A | B | C | ØG | ØR | S | ØH | N° FORI *HOLES N°* | ØI | P | F/T | ATT. ISO | ØM | ØN | L | Kg | KIT GUARNIZIONI *SEALS KIT* |
| DN 150 | 6" | ANSI150 | 152 | 154 | 227,5 | 40,5 | 332 | 215,9 | 1,6 | 241,3 | 8 | 3/4"UNC | 25 | 45/30 | F14 | 140 | M16 | 240 | 85,4 | KGBV485140 |
| DN 150 | 6" | ANSI300 | 152 | 154 | 227,5 | 40,5 | 332 | 215,9 | 1,6 | 269,7 | 12 | 3/4"UNC | 25 | 45/30 | F14 | 140 | M16 | 240 | 87,2 | KGBV48514D |
| DN 200 | 8" | ANSI150 | 203 | 188 | 274 | 44,8 | 396 | 269,7 | 1,6 | 298,4 | 8 | 3/4"UNC | 30 | 52/35 | F14 | 140 | M16 | 314 | 152,9 | KGBV485150 |

# MAGNUM SPLIT WAFER PN 16-40 ANSI 150-300

## ACCIAIO INOX DA FUSIONE *CASTING STAINLESS STEEL*

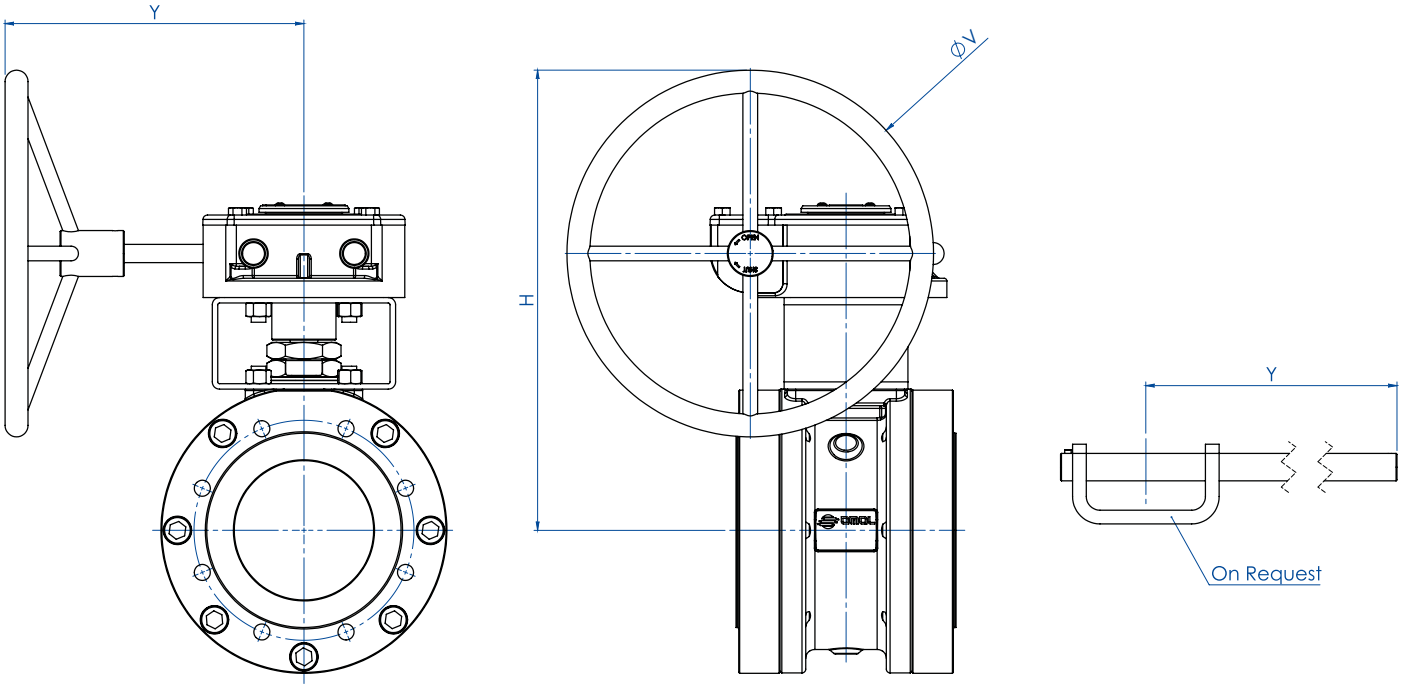


| DIMENSIONI RIDUTTORE *GEARBOX DIMENSIONS* PN | | | | | | | |
|---|---|---|---|---|---|---|---|
| MISURA *SIZE* | | PN | H | Y | ØV | Kg | KIT LEVA *LEVER KIT* |
| DN [mm] | [inch] | | | | | | |
| DN 150 | 6" | PN16 | 522 | 326 | 400 | 126 | --- |
| DN 150 | 6" | PN25-40 | 522 | 347 | 600 | 147 | --- |
| DN 200 | 8" | PN16 | 516 | 347 | 500 | 200 | --- |
| DN 200 | 8" | PN25 | 516 | 347 | 500 | 200 | --- |

| DIMENSIONI RIDUTTORE *GEARBOX DIMENSIONS* ANSI | | | | | | | |
|---|---|---|---|---|---|---|---|
| MISURA *SIZE* | | ANSI | H | Y | ØV | Kg | KIT LEVA *LEVER KIT* |
| DN [mm] | [inch] | | | | | | |
| DN 150 | 6" | ANSI 150 | 522 | 326 | 400 | 126 | --- |
| DN 150 | 6" | ANSI 300 | 522 | 347 | 600 | 147 | --- |
| DN 200 | 8" | ANSI 150 | 516 | 347 | 500 | 200 | --- |

# MAGNUM SPLIT WAFER - PN 16-40 ANSI 150-300
## ACCIAIO INOX DA FUSIONE *CASTING STAINLESS STEEL*
## TABELLA DEI MATERIALI *MATERIALS TABLE*

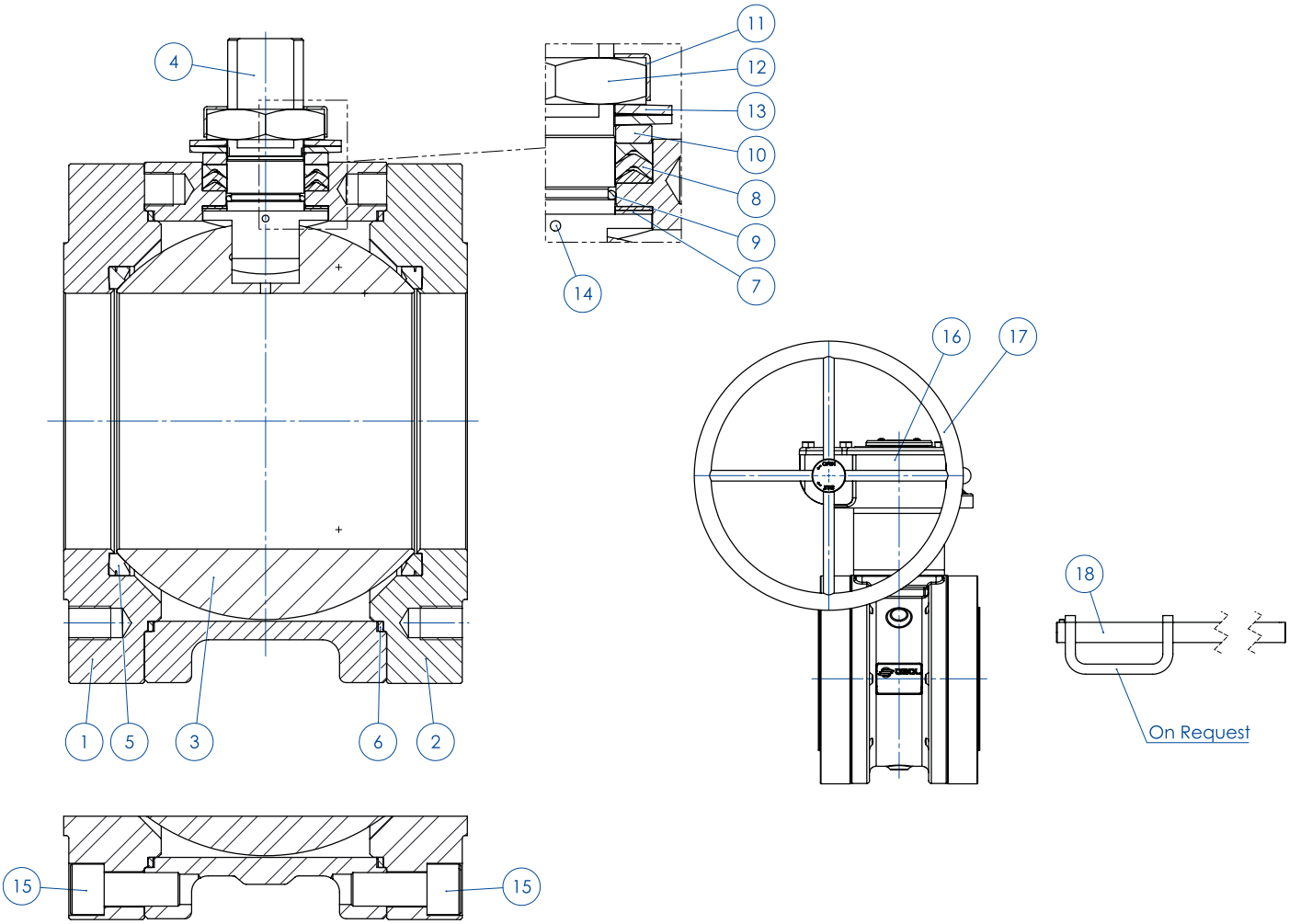


| MATERIALI *MATERIALS* SPLIT WAFER PN16-40 ANSI 150-300 DA FUSIONE *CASTING* | | |
|---|---|---|
| **N°** | **Descrizione *Description*** | **CF8M *Stainless steel*** |
| 1 | Corpo *Body* | ASTM A351 CF8M (1.4408/Gx5CrNiMo19-12-2) |
| 2 | Ghiera *Ring Nut* | ASTM A182 F316 / A479TP.316 (1.4401 / X5CrNiMo17-12-2) |
| 3 | Sfera *Ball* | ASTM A351 CF8M (1.4408/GX5CrNiMo19-12-2) |
| 4 | Stelo *Stem* | A564 TP.630 (17-4PH) |
| 5* | Seggio *Seat* | PTFE Modificato *Modified PTFE* (.) (2) |
| 6* | Guarnizione corpo ghiera *Body-ring nut gasket* | GRAFOIL |
| 7* | Tenuta inferiore stelo *Stem lower sealing* | PTFE Modificato *Modified PTFE* (.) |
| 8* | Pacco a V *Chevron rings* | PTFE Modificato *Modified PTFE* (.) |
| 9* | O-ring stelo *Stem o-ring* | FKM (.) |
| 10 | Anello premiguarnizione *Packing gland ring* | 304 S.S. |
| 11 | Piastra blocca dado *Stop nut plate* | 304 S.S. |
| 12 | Dado stelo *Stem nut* | Acciaio al carbonio zincato *Carbon steel galvanized* (x) |
| 13 | Molle a tazza *Springs washer* | Acciaio al carbonio zincato *Carbon steel galvanized* (xx) |
| 14 | Dispositivo antistatico *Antistatic device* | 316 S.S. |
| 15 | Vite corpo-ghiera *Body-ring nut screw* | A2.70 (304 S.S) |
| 16 | Riduttore *Gear box* | Ghisa (verniciato) *Cast iron (painted)* |
| 17 | Volantino *Handwheel* | Acciaio al carbonio Verniciato *Carbon steel painted* |
| 18 | Leva *Lever* | Fe37 zincato - *Galvanized* (x) |
| * Componenti del kit di guarnizioni *Components of seals kit* | | |

A richiesta disponibile in: *Available on request:*

(x): 304 s.s.
(xx): 301 s.s.
(2) DEVLON per DN150 PN25-40 - ANSI300 *DEVLON for DN150 PN25-40 - ANSI300*
(.): Altri materiali disponibili a richiesta *Other materials available on request*

# MAGNUM SPLIT WAFER - PN 16-40 ANSI 150-300
## ACCIAIO INOX DA FUSIONE *CASTING STAINLESS STEEL*
## ASSE LIBERO - CON LEVA - CON RIDUTTORE *FREE SHAFT - WITH LEVER - WITH GEARBOX*

**CODICI VALVOLE ASSE LIBERO (V__) - CON LEVA (L__) - CON RIDUTTORE (R__) IN ACCIAIO INOX DA FUSIONE**
***CASTING STAINLESS STEEL FREE SHAFT (V__) - WITH LEVER (L__) - WITH GEAR BOX (R__) OPERATED VALVE CODE***

| MISURA *SIZE* DN [mm] | [inch] | PN | CODICE ARTICOLO -CF8M *ITEM CODE -CF8M-* |
|---|---|---|---|
| DN150 (*) | 6" | PN16 | V/RM414E00AHA0AAQNV000 |
| DN150 | 6" | PN25-40 | V/RM414I00AHA0AAMNV000 |
| DN200 (*) | 8" | PN16 | V/RM415E00AHA0AAQNV000 |
| DN200 (*) | 8" | PN25 | V/RM415H00AHA0AAQNV000 |

**CODICI VALVOLE ASSE LIBERO (V__) - CON LEVA (L__) - CON RIDUTTORE (R__) IN ACCIAIO INOX DA FUSIONE**
***CASTING STAINLESS STEEL FREE SHAFT (V__) - WITH LEVER (L__) - WITH GEAR BOX (R__) OPERATED VALVE CODE***

| MISURA *SIZE* DN [mm] | [inch] | ANSI | CODICE ARTICOLO -CF8M *ITEM CODE -CF8M-* |
|---|---|---|---|
| DN150 (*) | 6" | ANSI 150 | V/RM414101AHA0AAQNV000 |
| DN150 | 6" | ANSI 300 | V/RM414201AHA0AAMNV000 |
| DN200 (*) | 8" | ANSI 150 | V/RM415101AHA0AAQNV000 |

Versione STANDARD con riduttore manuale per DN150 e DN200. *STANDARD version with manual gearbox for DN150 and DN200.*
(*) A RICHIESTA versione con leva. *ON REQUEST version with manual lever.*

# MAGNUM SPLIT WAFER - PN 16-40 ANSI 150-300
## ACCIAIO INOX DA FUSIONE *CASTING STAINLESS STEEL*
## CON ATTUATORE PNEUMATICO DA *WITH DA PNEUMATIC ACTUATOR*

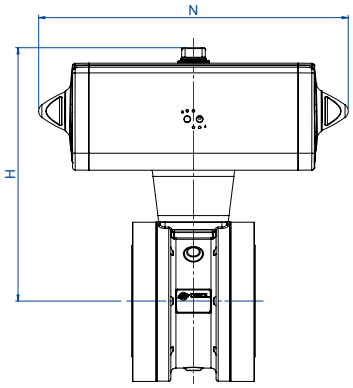


| CODICI ARTICOLI IN CF8M ACCIAIO INOX *ITEM CODES IN CF8M STAINLESS STEEL* | | | | | | | | |
|---|---|---|---|---|---|---|---|---|
| MISURA *SIZE* | | PN | CODICE ARTICOLO *ITEM CODE* | ATTUATORE *ACTUATOR* | KIT di montaggio *Mounting KIT* | N [mm] | H [mm] | Peso Kg *Weight Kg* |
| DN [mm] | [inch] | | | | | | | |
| DN 150 | 6" | PN 16 | DM414E00AHA0AAQNV000AFMA0 | DAN0720411S | KCNFGHD5364 | 433,1 | 432,0 | 102,1 |
| DN 150 | 6" | PN 25-40 | DM414I00AHA0AAMNV000AFRA0 | DAN1920411S | KCNGGHD5600 | 601,0 | 491,7 | 125,5 |
| DN 200 | 8" | PN 16 | DM415E00AHA0AAQNV000AFQA0 | DAN1440411S | KCNGGHD5366 | 567,1 | 524,0 | 181,5 |
| DN 200 | 8" | PN 25 | DM415H00AHA0AAQNV000AFQA0 | DAN1440411S | KCNGGHD5366 | 567,1 | 524,0 | 184,0 |

| CODICI ARTICOLI IN CF8M ACCIAIO INOX *ITEM CODES IN CF8M STAINLESS STEEL* | | | | | | | | |
|---|---|---|---|---|---|---|---|---|
| MISURA *SIZE* | | ANSI | CODICE ARTICOLO *ITEM CODE* | ATTUATORE *ACTUATOR* | KIT di montaggio *Mounting KIT* | N [mm] | H [mm] | Peso Kg *Weight Kg* |
| DN [mm] | [inch] | | | | | | | |
| DN 150 | 6" | ANSI 150 | DM414101AHA0AAQNV000AFMA0 | DAN0720411S | KCNFGHD5364 | 433,1 | 412,0 | 101,8 |
| DN 150 | 6" | ANSI 300 | DM414201AHA0AAMNV000AFRA0 | DAN1920411S | KCNGGHD5600 | 601,0 | 491,7 | 126,1 |
| DN 200 | 8" | ANSI 150 | DM415101AHA0AAQNV000AFQA0 | DAN1440411S | KCNGGHD5366 | 567,1 | 484,0 | 181,1 |

# MAGNUM SPLIT WAFER - PN 16-40 ANSI 150-300
## ACCIAIO INOX DA FUSIONE *CASTING STAINLESS STEEL*
## CON ATTUATORE PNEUMATICO SR *WITH SR PNEUMATIC ACTUATOR*

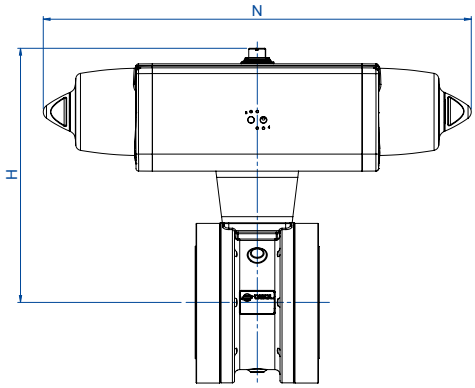


| CODICI ARTICOLI IN CF8M ACCIAIO INOX *ITEM CODES IN CF8M STAINLESS STEEL* | | | | | | | | |
|---|---|---|---|---|---|---|---|---|
| MISURA *SIZE* | | PN | CODICE ARTICOLO *ITEM CODE* | ATTUATORE *ACTUATOR* | KIT di montaggio *Mounting KIT* | N [mm] | H [mm] | Peso Kg *Weight Kg* |
| DN [mm] | [inch] | | | | | | | |
| DN 150 | 6" | PN 16 | SM414E00AHA0AAQNV000AFQA0 | SRN0720401S | KCNGGHD5368 | 798,0 | 470,0 | 122,5 |
| DN 150 | 6" | PN 25-40 | SM414I00AHA0AAMNV000AFVA0 | SR1920E1608A | KCNGHHD5349 | 1001,0 | 568,5 | 160,5 |
| DN 200 | 8" | PN 16 | SM415E00AHA0AAQNV000AFSA0 | SR1440E16D8A | KCNGHHD5370 | 834,0 | 647,0 | 231,5 |
| DN 200 | 8" | PN 25 | SM415H00AHA0AAQNV000AFSA0 | SR1440E16D8A | KCNGHHD5370 | 834,0 | 647,0 | 236,0 |

| CODICI ARTICOLI IN CF8M ACCIAIO INOX *ITEM CODES IN CF8M STAINLESS STEEL* | | | | | | | | |
|---|---|---|---|---|---|---|---|---|
| MISURA *SIZE* | | ANSI | CODICE ARTICOLO *ITEM CODE* | ATTUATORE *ACTUATOR* | KIT di montaggio *Mounting KIT* | N [mm] | H [mm] | Peso Kg *Weight Kg* |
| DN [mm] | [inch] | | | | | | | |
| DN 150 | 6" | ANSI 150 | SM414101AHA0AAQNV000AFQA0 | SRN0720401S | KCNGGHD5368 | 798,0 | 470,0 | 123,5 |
| DN 150 | 6" | ANSI 300 | SM414201AHA0AAMNV000AFVA0 | SR1920E1608A | KCNGHHD5349 | 1001,0 | 568,5 | 161,0 |
| DN 200 | 8" | ANSI 150 | SM415101AHA0AAQNV000AFSA0 | SR1440E16D8A | KCNGHHD5370 | 834,0 | 647,0 | 233,0 |